7

Integral Formulation of General Principles

In Sections 3.15, 4.4, 4.7, 4.14, the field equations expressing the principles of conservation of mass, of linear momentum, of moment of momentum, and of energy were derived by the consideration of differential elements in the continuum. In the form of differential equations, the principles are sometimes referred to as **local principles**. In this chapter, we shall formulate the principles in terms of an arbitrary fixed part of the continuum. The principles are then in integral form, which is sometimes referred to as the **global principles**. Under the assumption of smoothness of functions involved, the two forms are completely equivalent and in fact the requirement that the global theorem be valid for each and every part of the continuum results in the differential form of the balance equations.

The purpose of the present chapter is twofold:(1) to provide an alternate approach to the formulation of field equations expressing the general principles, and (2) to apply the global theorems to obtain approximate solutions of some engineering problems, using the concept of control volumes, moving or fixed.

We shall begin by proving Green's theorem, from which the divergence theorem, which we shall need later in the chapter, will be introduced through a generalization (without proof).

7.1 Green's Theorem

Let $P(x,y)$, $\partial P/\partial x$ and $\partial P/\partial y$ be continuous functions of x and y in a closed region R bounded by the closed curve C. Let $\mathbf{n} = n_x\mathbf{e}_1+n_y\mathbf{e}_2$ be the unit outward normal of C. Then **Green's theorem**† states that

$$\int_R \frac{\partial P}{\partial x} dA = \int_C P\, dy = \int_C P\, n_x ds \tag{7.1.1}$$

and

† The theorem is valid under less restrictive conditions on the first partial derivative.

$$\int_R \frac{\partial P}{\partial y} dA = -\int_C P\,dx = \int_C P n_y ds \tag{7.1.2}$$

where the subscript C denotes the line integral around the closed curve C in the counter-clockwise direction. For the proof, let us assume for simplicity that the region R is such that every straight line through an interior point and parallel to either axis cuts the boundary in exactly two points. Figure 7.1 shows one such region. Let a and b be the least and the greatest values of y on C (points G and H in the figure). Let $x = x_1(y)$ and $x = x_2(y)$ be equations for the boundaries HAG and GBH respectively. Then

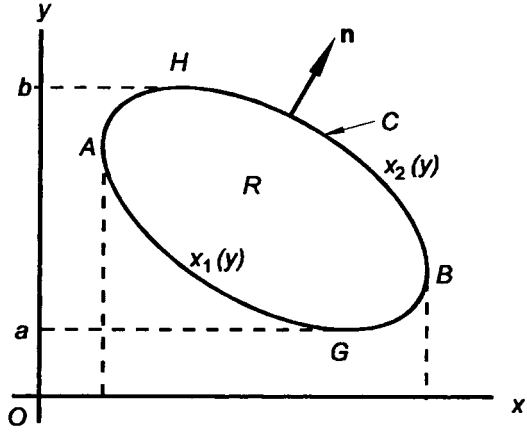

Fig. 7.1

$$\int_R \frac{\partial P}{\partial x} dA = \int_a^b \left[\int_{x_1(y)}^{x_2(y)} \frac{\partial P}{\partial x} dx \right] dy \tag{i}$$

Now

$$\int_{x_1(y)}^{x_2(y)} \frac{\partial P}{\partial x} dx = P(x,y)\Big]_{x_1(y)}^{x_2(y)} = P[x_2(y), y] - P[x_1(y), y] \tag{ii}$$

Thus,

$$\int_R \frac{\partial P}{\partial x} dA = \int_a^b P[x_2(y), y]dy - \int_a^b P[x_1(y), y]dy$$

$$= \int_{GBH} P dy - \int_{GAH} P dy \tag{iii}$$

Since

$$\int_{GAH} Pdy = -\int_{HAG} Pdy \tag{iv}$$

Thus

$$\int_R \frac{\partial P}{\partial x} dA = \int_{GBH} Pdy + \int_{HAG} Pdy = \int_C Pdy \tag{v}$$

Let s be the arc length measured along the boundary curve C in the counterclockwise direction and let $x = x(s)$ and $y = y(s)$ be the parametric equations for the boundary curve. Then, $dy/ds = +n_x$, Thus,

$$\int_R \frac{\partial P}{\partial x} dA = \int_C Pn_x ds$$

which is Eq. (7.1.1).

Equation (7.1.2) can be proven in a similar manner.

Example 7.1.1

For $P(x,y) = xy^2$, evaluate $\int_C P(x,y)n_x ds$ along the closed path $OABC$ (Fig. 7.2). Also, evaluate the area integral $\int_R (\partial P/dx)dA$. Compare the results.

Solution. We have

$$\int_C P(x,y)n_x ds = \int_{OA} x(0)^2(0)ds + \int_{AB} by^2(1)dy + \int_{BC} xh^2(0)ds$$
$$+ \int_{CO} (0)y^2(-1)ds = \int_0^h by^2 dy = \frac{bh^3}{3} \tag{i}$$

On the other hand,

$$\int_R \frac{\partial P}{\partial x} dA = \int_R y^2 dA = \int_0^h y^2 bdy = \frac{bh^3}{3} \tag{ii}$$

Thus,

$$\int_C Pn_x ds = \int_R \frac{\partial P}{\partial x} dA \tag{iii}$$

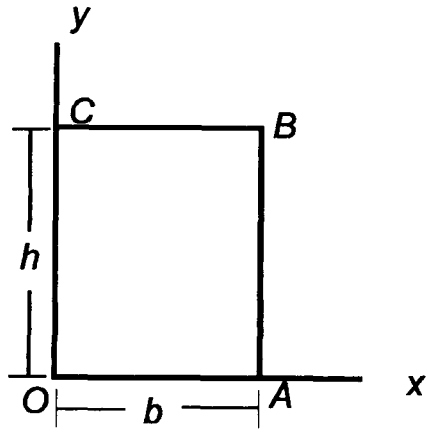

Fig. 7.2

7.2 Divergence Theorem

Let $\mathbf{v} = v_1(x,y)\mathbf{e}_1 + v_2(x,y)\mathbf{e}_2$ be a vector field. Applying Eqs. (7.1.1) and (7.1.2) to v_1 and v_2 and adding, we have

$$\int_C (v_1 n_1 + v_2 n_2) ds = \int_R \left(\frac{\partial v_1}{\partial x} + \frac{\partial v_2}{\partial y} \right) dA \tag{7.2.1a}$$

In indicial notation, Eq. (7.2.1a) becomes

$$\int_C v_i n_i ds = \int_R \frac{\partial v_i}{\partial x_i} dA \tag{7.2.1b}$$

and in invariant notation,

$$\int_C \mathbf{v} \cdot \mathbf{n} ds = \int_R \operatorname{div} \mathbf{v}\, dA \tag{7.2.1c}$$

The following generalization not only appears natural, but can indeed be proven (we omit the proof)

$$\int_S v_i n_i dS = \int_R \frac{\partial v_i}{\partial x_i} dV \tag{7.2.2a}$$

Or, in invariant notation,

$$\int_S \mathbf{v}\cdot\mathbf{n}dS = \int_R \operatorname{div}\mathbf{v}dV \tag{7.2.2b}$$

where S is a surface forming the complete boundary of a bounded closed region R in space and $\mathbf{n}$ is the outward unit normal of S. Equation (7.2.2) is known as the **divergence theorem** (or **Gauss theorem**). The theorem is valid if the components of $\mathbf{v}$ are continuous and have continuous first partial derivatives in R. It is also valid under less restrictive conditions on the derivatives.

Next, if T_{ij} are components of a tensor $\mathbf{T}$, then the application of Eq. (7.2.2a) gives

$$\int_S T_{ij}n_j dS = \int_R \frac{\partial T_{ij}}{\partial x_j}dV \tag{7.2.3a}$$

Or in invariant notation,

$$\int_S \mathbf{T}\mathbf{n}dS = \int_R \operatorname{div}\mathbf{T}dV \tag{7.2.3b}$$

Equation (7.2.3) is the divergence theorem for a tensor field. It is obvious that for tensor fields of higher order, Eq. (7.2.3b) is also valid provided the Cartesian components of div$\mathbf{T}$ are defined to be $\partial T_{ijkl\ldots s} / \partial x_s$.

Example 7.2.1

Let $\mathbf{T}$ be a stress tensor field and let S be a closed surface. Show that the resultant force of the distributive forces on S is given by

$$\int_V (\operatorname{div}\mathbf{T})dV \tag{i}$$

Solution. Let $\mathbf{f}$ be the resultant force, then

$$\mathbf{f} = \int_S \mathbf{t}\,dS \tag{ii}$$

where $\mathbf{t}$ is the stress vector. But $\mathbf{t} = \mathbf{T}\mathbf{n}$, therefore from the divergence theorem, we have

$$\mathbf{f} = \int_S \mathbf{t}dS = \int_S \mathbf{T}\mathbf{n}dS = \int_V (\operatorname{div}\mathbf{T})dV \tag{7.2.4a}$$

i.e.,

$$f_i = \int_V \frac{\partial T_{ij}}{\partial x_j}dV \tag{7.2.4b}$$

Example 7.2.2

Referring to Example 7.2.1, also show that the resultant moment, about a fixed point O, of the distributive forces on S is given by

$$\int_V [\mathbf{x}\times(\mathrm{div}\mathbf{T})+2\mathbf{t}^A]dV \tag{i}$$

where $\mathbf{x}$ is the position vector of the particle with volume dV from the fixed point O and $\mathbf{t}^A$ is the axial (or dual) vector of the antisymmetric part of $\mathbf{T}$ (see Sect. 2B16).

Solution. Let $\mathbf{m}$ denote the resultant moment about O. Then

$$\mathbf{m} = \int_S \mathbf{x}\times\mathbf{t}dS \tag{ii}$$

Let m_i be the components of $\mathbf{m}$, then

$$m_i = \int_S \varepsilon_{ijk}x_j t_k dS = \int_S \varepsilon_{ijk}x_j T_{kp}n_p dS \tag{iii}$$

Using the divergence theorem, Eq. (7.2.3), we have

$$m_i = \int_V \frac{\partial}{\partial x_p}(\varepsilon_{ijk}x_j T_{kp})dV \tag{iv}$$

Now,

$$\frac{\partial}{\partial x_p}(\varepsilon_{ijk}x_j T_{kp}) = \varepsilon_{ijk}\left(\frac{\partial x_j}{\partial x_p}T_{kp}+x_j\frac{\partial T_{kp}}{\partial x_p}\right)$$
$$= \varepsilon_{ijk}\left(\delta_{jp}T_{kp}+x_j\frac{\partial T_{kp}}{\partial x_p}\right) = \varepsilon_{ipk}T_{kp}+\varepsilon_{ijk}x_j\frac{\partial T_{kp}}{\partial x_p} = -\varepsilon_{ikp}T_{kp}+\varepsilon_{ijk}x_j\frac{\partial T_{kp}}{\partial x_p} \tag{v}$$

Noting that $-\varepsilon_{ikp}T_{kp}$ are components of twice the dual vector of the antisymmetric part of $\mathbf{T}$ [see Eq. (2B16.2b)], and $\varepsilon_{ijk}x_j(\frac{\partial T_{ip}}{\partial x_p})$ are components of $[\mathbf{x}\times\mathrm{div}\mathbf{T}]$, we have

$$\mathbf{m} = \int_S \mathbf{x}\times\mathbf{t}dS = \int_V [\mathbf{x}\times(\mathrm{div}\mathbf{T})+2\mathbf{t}^A]dV \tag{7.2.5}$$

Example 7.2.3

Referring to Example 7.2.2, show that the total power (rate of work done) by the stress vector on S is given by,

$$\int_V [(\text{div}\mathbf{T})\cdot\mathbf{v}+\text{tr}(\mathbf{T}^T\nabla\mathbf{v})]dV \tag{i}$$

where $\mathbf{v}$ is the velocity field.

Solution. Let P be the total power, then

$$P = \int_S \mathbf{t}\cdot\mathbf{v}dS = \int_S \mathbf{Tn}\cdot\mathbf{v}dS \tag{ii}$$

But $\mathbf{Tn}\cdot\mathbf{v} = \mathbf{n}\cdot\mathbf{T}^T\mathbf{v}$ (definition of transpose of a tensor). Thus,

$$P = \int_S \mathbf{n}\cdot(\mathbf{T}^T\mathbf{v})dS \tag{iii}$$

Application of the divergence theorem gives

$$P = \int_V \text{div}(\mathbf{T}^T\mathbf{v})dV \tag{iv}$$

Now,

$$\text{div}(\mathbf{T}^T\mathbf{v}) = \frac{\partial(T_{ji}v_j)}{\partial x_i} = \frac{\partial T_{ji}}{\partial x_i}v_j + T_{ji}\frac{\partial v_j}{\partial x_i} = (\text{div}\mathbf{T})\cdot\mathbf{v}+\text{tr}(\mathbf{T}^T\nabla\mathbf{v}) \tag{v}$$

Thus,

$$P = \int_S \mathbf{t}\cdot\mathbf{v}dS = \int_V [(\text{div}\mathbf{T})\cdot\mathbf{v}+\text{tr}(\mathbf{T}^T\nabla v)dV \tag{7.2.6}$$

7.3 Integrals over a Control Volume and Integrals over a Material Volume

Consider first a one-dimensional problem in which the motion of a continuum, in Cartesian coordinates, is given by

$$x = \hat{x}(X,t),\ y = Y,\ z = Z \tag{7.3.1}$$

and the density field is given by

$$\rho = \rho(x,t) \tag{7.3.2}$$

The integral

$$m(t, x^{(1)}, x^{(2)}) = \int_{x^{(1)}}^{x^{(2)}} \rho(x,t)Adx \tag{7.3.3}$$

with fixed values of $x^{(1)}$ and $x^{(2)}$, is an integral over a fixed **control volume** ; it gives the total mass at time t within the spatially fixed cylindrical volume of constant cross-sectional area A and bounded by the end faces $x = x^{(1)}$ and $x = x^{(2)}$.

Let $X^{(1)}$ and $X^{(2)}$ be the material coordinates for the particles which, at time t are at $x^{(1)}$ and $x^{(2)}$ respectively, i.e., $x^{(1)} = \hat{x}(X^{(1)}, t)$ and $x^{(2)} = \hat{x}(X^{(2)}, t)$, then the integral

$$M(t,X^{(1)},X^{(2)}) = \int_{\hat{x}(X^{(1)},t)}^{\hat{x}(X^{(2)},t)} \rho(x,t)A dx \tag{7.3.4}$$

with its integration limits functions of time, (in accordance with the motion of the material particles which at time t are at $x^{(1)}$ and $x^{(2)}$), is an integral over a material volume; it gives the total mass at time t , of that part of material which is instantaneously (at time t) coincidental with that inside the fixed boundary surface considered in Eq. (7.3.3). Obviously, at time t, both integrals, i.e., Eqs. (7.3.3) and (7.3.4), have the same value. At other times, say at $t+dt$, however, they have different values. Indeed,

$$\frac{\partial m}{\partial t} \equiv \left[\frac{\partial}{\partial t}\int_{x^{(1)}}^{x^{(2)}} \rho A dx\right]_{x^{(1)},x^{(2)}-\text{fixed}} \tag{7.3.5}$$

is different from

$$\frac{\partial M}{\partial t} = \left[\frac{\partial}{\partial t}\int_{\hat{x}(X^{(1)},t)}^{\hat{x}(X^{(2)},t)} \rho(x,t)A dx\right]_{X^{(1)},X^{(2)}-\text{fixed}} \equiv \frac{D}{Dt}\int_{\hat{x}(X^{(1)},t)}^{\hat{x}(X^{(2)},t)} \rho(x,t)A dx \tag{7.3.6}$$

We note that $\partial m/\partial t$ in Eq. (7.3.5) gives the rate at which mass is increasing inside the fixed control volume bounded by the cylindrical lateral surface and the end faces $x = x^{(1)}$ and $x = x^{(2)}$, whereas $\partial M/\partial t$ in Eq. (7.3.6) gives the rate of increase of the mass of that part of material which at time t is coincidental with that in the fixed control volume. They should obviously be different. In fact, the principle of conservation of mass demands that the mass within a material volume should remain a constant, whereas the mass within the control volume in general changes with time.

The above one dimensional example serves to illustrate the two types of volume integrals which we shall employ in the following sections. We shall use V_c to indicate a fixed **control volume** and V_m to indicate a **material volume**. That is, for any tensor $\mathbf{T}$ (including a scalar) the integral

$$\int_{V_c} \mathbf{T}(\mathbf{x}, t)dV$$

is over the fixed control volume V_c and the rate of change of this integral is denoted by

$$\frac{\partial}{\partial t}\int_{V_c}\mathbf{T}(\mathbf{x},t)dV$$

whereas the integral

$$\int_{V_m}\mathbf{T}(\mathbf{x},t)dV$$

is over the material volume V_m and the rate of change of this integral, is denoted by

$$\frac{D}{Dt}\int_{V_m}\mathbf{T}(\mathbf{x},t)dV$$

We note that the integrals over the material volume is a special case of the more general integrals where the boundaries move in some prescribed manner which may or may not be in accordance with the motion of the material particles on the boundary. In this chapter, the control volume denoted by V_c will always denote a *fixed* control volume; they are either fixed with respect to an inertial frame or fixed with respect to a frame moving with respect to the inertial frame (see Section 7.7).

7.4 Reynolds Transport Theorem

Let $\mathbf{T}(\mathbf{x}, t)$ be a given scalar or tensor function of spatial coordinates (x_1, x_2, x_3) and time t. Examples of $\mathbf{T}$ are: density $\rho(\mathbf{x}, t)$, linear momentum $\rho(\mathbf{x}, t)\mathbf{v}(\mathbf{x}, t)$, angular momentum $\mathbf{r}\times[\rho(\mathbf{x}, t)\mathbf{v}(\mathbf{x}, t)]$ etc.

Let

$$\int_{V_m(t)}\mathbf{T}(\mathbf{x},t)dV \tag{i}$$

be an integral of $\mathbf{T}(\mathbf{x}, t)$ over a material volume $V_m(t)$. As discussed in the last section, the material volume $V_m(t)$ consists of the same material particles at all time and therefore has time-dependent boundary surface $S_m(t)$ due to the movement of the material.

We wish to evaluate the rate of change of such integrals (e.g., the rate of change of mass, of linear momentum etc., of a material volume) and to relate them to physical laws (such as the conservation of mass, balance of linear momentum etc.)

The **Reynolds Transport Theorem** states that

$$\frac{D}{Dt}\int_{V_{m(t)}}\mathbf{T}(\mathbf{x}, t)dV = \int_{V_c}\frac{\partial\mathbf{T}(\mathbf{x}, t)}{\partial t}dV + \int_{S_c}\mathbf{T}(\mathbf{v}\cdot\mathbf{n})dS \tag{7.4.1}$$

or

$$\frac{D}{Dt}\int_{V_{m(t)}}\mathbf{T}(\mathbf{x}, t)dV = \int_{V_c}\left(\frac{D\mathbf{T}}{Dt}+\mathbf{T}\,\mathrm{div}\mathbf{v}\right)dV \tag{7.4.2}$$

where V_c is the control volume (fixed in space) which instantaneously coincides with the material volume V_m (moving with the continuum), S_c is the boundary surface of V_c, $\mathbf{n}$ is the outward unit normal vector. We note that the notation D/Dt in front of the integral at the left hand side of Eqs (7.4.2) emphasizes that the boundary surface of the integral moves with the material and we are calculating the rate of change by following the material.

Reynold's theorem can be derived in the following two ways:

(A)

$$\frac{D}{Dt}\int_{V_{m(t)}} \mathbf{T}(\mathbf{x},t)dV = \int_{V_m=V_c} \frac{D}{Dt}[\mathbf{T}(\mathbf{x},t)dV] = \int_{V_c} \frac{D\mathbf{T}}{Dt}dV + \int_{V_c} \mathbf{T}\frac{D}{Dt}(dV) \tag{i}$$

Since [see Eq. (3.13.7)]

$$\frac{D}{Dt}(dV) = (\mathrm{div}\mathbf{v})dV \tag{ii}$$

therefore, Eq. (i) becomes

$$\frac{D}{Dt}\int_{V_{m(t)}} \mathbf{T}(\mathbf{x},t)dV = \int_{V_c}\left[\frac{D\mathbf{T}}{Dt}+\mathbf{T}(\mathrm{div}\,\mathbf{v})\right]dV \tag{iii}$$

This is Eq. (7.4.2).

In terms of Cartesian components, this equation reads, if T is a scalar

$$\frac{D}{Dt}\int_{V_{m(t)}} T(\mathbf{x},t)dV = \int_{V_c}\left[\frac{DT}{Dt}+T\left(\frac{\partial v_k}{\partial x_k}\right)\right]dV \tag{7.4.2a}$$

If $\mathbf{T}$ is a vector, we replace T in Eq. (7.4.2a) with T_i and if $\mathbf{T}$ is a second order tensor, we replace T with T_{ij} and so on.

Since

$$\frac{DT}{Dt}+T\left(\frac{\partial v_k}{\partial x_k}\right) = \frac{\partial T}{\partial t}+v_k\frac{\partial T}{\partial x_k}+T\frac{\partial v_k}{\partial x_k} = \frac{\partial T}{\partial t}+\frac{\partial}{\partial x_k}(Tv_k) \tag{iv}$$

and from the Gauss theorem, we have

$$\int\frac{\partial}{\partial x_k}(Tv_k)dV = \int T v_k n_k dS = \int T\mathbf{v}\cdot\mathbf{n}\,dS \tag{7.4.3}$$

so that, with $\mathbf{T}$ denoting tensor of all orders (including scalars and vectors)

$$\frac{D}{Dt}\int_{V_m}\mathbf{T}dV = \int_{V_c}\frac{\partial\mathbf{T}}{\partial t}dV+\int_{V_c}\mathbf{T}(\mathbf{v}\cdot\mathbf{n})dS \tag{v}$$

This is Eq. (7.4.1).

(B) Alternatively, we can derive Eq. (7.4.2) in the following way:

Since [see Eq. (3.29.3)]

$$dV = (\det \mathbf{F})\, dV_o \tag{vi}$$

where **F** is the deformation gradient and dV_o is the volume at the reference state, therefore

$$\int_{V_m} \mathbf{T}(\mathbf{x}, t)\, dV = \int_{V_o} \mathbf{T}(\mathbf{x}, t)(\det \mathbf{F})\, dV_o \tag{vii}$$

Thus,

$$\frac{D}{Dt}\int_{V_m} \mathbf{T}(\mathbf{x}, t)\, dV = \frac{D}{Dt}\int_{V_o} \mathbf{T}(\det \mathbf{F})\, dV_o = \int_{V_o} \left[\frac{D}{Dt}(\mathbf{T}\det \mathbf{F})\right] dV_o$$

$$= \int_{V_o} \left[\frac{D\mathbf{T}}{Dt}(\det \mathbf{F}) + \mathbf{T}\frac{D}{Dt}(\det \mathbf{F})\right] dV_o \tag{viii}$$

But from Eq. (vi) and Eq. (ii), we have,

$$\frac{D}{Dt}(\det \mathbf{F}) = \frac{1}{dV_o}\left(\frac{D}{Dt} dV\right) = \frac{1}{dV_o} \operatorname{div}\mathbf{v}\, dV = \operatorname{div}\mathbf{v}\,(\det \mathbf{F}) \tag{ix}$$

therefore,

$$\frac{D}{Dt}\int_{V_{m(t)}} \mathbf{T}(\mathbf{x}, t)\, dV = \int_{V_c} \left[\frac{D\mathbf{T}}{Dt} + \mathbf{T}(\operatorname{div}\mathbf{v})\right] dV \tag{x}$$

This is Eq. (7.4.2)

7.5 Principle of Conservation of Mass

The global principle of conservation of mass states that the total mass of a fixed part of material should remain constant at all times. That is

$$\frac{D}{Dt}\int_{V_m} \rho(\mathbf{x}, t)\, dV = 0 \tag{7.5.1}$$

Using Reynolds Transport theorem (7.4.1), we obtain

$$\int_{V_c} \frac{\partial}{\partial t}\rho(\mathbf{x}, t)\, dV = -\int_{S_c} \rho(\mathbf{v}\cdot\mathbf{n})\, dS \tag{7.5.2a}$$

or,

$$\frac{\partial}{\partial t}\int_{V_c}\rho(\mathbf{x},t)dV = -\int_{S_c}\rho(\mathbf{v}\cdot\mathbf{n})dS \tag{7.5.2b}$$

This equation states that *the time rate at which mass is increasing inside a control volume = the mass influx (i.e., net rate of mass inflow) through the control surface.*

Substituting ρ for T in Eq. (7.4.3), we obtain from Eq. (7.5.2b)

$$\int_{V_c}\left[\frac{\partial\rho}{\partial t}+\text{div}(\rho\mathbf{v})\right]dV = 0 \tag{7.5.3}$$

This equation is to be valid for all V_c, therefore, we must have

$$\frac{\partial\rho}{\partial t}+\text{div}(\rho\mathbf{v}) = 0 \tag{7.5.4a}$$

This equation can also be written as

$$\frac{D\rho}{Dt} + \rho\,\text{div}\mathbf{v} = 0 \tag{7.5.4b}$$

This is the equation of continuity derived in Section 3.15.

Example 7.5.1

Given the motion

$$x_1 = (1+t)X_1,\ \ x_2 = X_2,\ \ x_3 = X_3 \tag{i}$$

and the density field

$$\rho = \frac{\rho_o}{1+t}\quad (\rho_o = \text{constant}) \tag{ii}$$

(a) Obtain the velocity field.

(b) Check that the equation of continuity is satisfied.

(c) Compute the total mass and the rate of increase of mass inside a cylindrical control volume of cross-sectional area A and having as its end faces the plane $x_1 = 1$ and $x_1 = 3$.

(d) Compute the net rate of inflow of mass into the control volume of part(c).

(e) Find the total mass at time t of the material which at the reference time ($t = 0$) was in the control volume of (c).

(f) Compute the total linear momentum for the fixed part of material considered in part (e)

Solution. (a)

$$v_1 = \frac{Dx_1}{Dt} = X_1 = \frac{x_1}{1+t} \quad , \quad v_2 = 0, \; v_3 = 0 \tag{iii}$$

(b)

$$\frac{D\rho}{Dt} + \rho \text{div}\mathbf{v} = \frac{\partial \rho}{\partial t} + v_1 \frac{\partial \rho}{\partial x_1} + \rho \frac{\partial v_1}{\partial x_1} = -\frac{\rho_o}{(1+t)^2} + \frac{x_1}{(1+t)}(0) + \frac{\rho_o}{(1+t)^2} = 0 \tag{iv}$$

Thus, the equation of continuity is satisfied.

(c) The total mass inside the control volume at time t is

$$m(t) = \int_{V_c} \rho(x,t)dV = \int_{x_1=1}^{x_1=3} \rho(x,t)dV = \int_{x_1=1}^{x_1=3} \frac{\rho_o}{1+t} A dx_1 = \frac{2A\rho_o}{1+t} \tag{v}$$

and the rate at which the mass is increasing inside the control volume at time t is

$$\frac{\partial m}{\partial t} = -\frac{2A\rho_o}{(1+t)^2} \tag{vi}$$

i..e, the mass is decreasing.

(d) Since $v_2 = v_3 = 0$, there is neither inflow nor outflow through the lateral surface of the control volume. Through the end face $x_1 = 1$, the rate of inflow (mass influx) is

$$(\rho A v)_{x_1 = 1} = \frac{\rho_o A}{(1+t)^2} \tag{vii}$$

On the other hand, the mass outflux through the end face $x_1 = 3$, is

$$(\rho A v)_{x_1 = 3} = \frac{3\rho_o A}{(1+t)^2}. \tag{viii}$$

Thus, the net mass influx is

$$-\frac{2\rho_o A}{(1+t)^2} \tag{ix}$$

which is the same as Eq. (vi).

(e) The particles which were at $x_1 = 1$ and $x_1 = 3$ when $t = 0$ have the material coordinate $X_1 = 1$ and $X_1 = 3$ respectively. Thus, the total mass at time t is

$$M = \int_{x_1=(1+t)}^{x_1=3(1+t)} \frac{\rho_o}{1+t} A dx_1 = \frac{\rho_o A}{1+t}[3(1+t) - (1+t)] = 2\rho_o A \tag{x}$$

We see that this time-dependent integral turns out to be independent of time. This is because the chosen density and velocity field satisfy the equation of continuity so that, the total mass of a fixed part of material is a constant.

(f) Total linear momentum is, since $v_2 = v_3 = 0$,

$$\mathbf{P} = \int_{(1+t)}^{3(1+t)} \rho v_1 A dx_1 \mathbf{e}_1 = \frac{A\rho_o}{(1+t)^2} \int_{1+t}^{3(1+t)} x_1 dx_1 \mathbf{e}_1$$

$$= \frac{A\rho_o}{(1+t)^2}\left[\frac{9(1+t)^2}{2} - \frac{(1+t)^2}{2}\right]\mathbf{e}_1 = 4A\rho_o \mathbf{e}_1 \tag{xi}$$

The fact that **P** is also a constant is accidental. The given motion happens to be accelerationless, which corresponds to no net force acting on the material volume. In general, the linear momentum for a fixed part of material is a function of time.

7.6 Principle of Linear Momentum

The **global principle of linear momentum** states that the total force (surface and body forces) acting on any fixed part of material is equal to the rate of change of linear momentum of the part. That is, with ρ denoting density, **v** velocity, **t** stress vector, and **B** body force per unit mass, the principle states

$$\frac{D}{Dt}\int_{V_m} \rho \mathbf{v} dV = \int_{S_c} \mathbf{t}\, dS + \int_{V_c} \rho \mathbf{B} dV \tag{7.6.1}$$

Now, by using Reynolds Transport Theorem, Eq. (7.4.1), Eq. (7.6.1) can be written as

$$\int_{S_c} \mathbf{t} dS + \int_{V_c} \rho \mathbf{B} dV = \int_{V_c} \frac{\partial \rho \mathbf{v}}{\partial t} dV + \int_{S_c} \rho \mathbf{v}(\mathbf{v}\cdot\mathbf{n}) dS \tag{7.6.2}$$

In words, Eq. (7.6.2) states that

Total force exerted on a fixed part of a material instantaneously in a control volume V_c = time rate of change of total linear momentum inside the control volume + net outflux of linear momentum through the control surface S_c.

Equation (7.6.2) is very useful for obtaining approximate results in many engineering problems.

Using Eq. (7.4.2) (with **T** replaced by ρ **v**), Eq. (7.6.1) can also be written as

$$\int_{V_c} \frac{D}{Dt}(\rho \mathbf{v})\, dV + \int_{V_c} \rho \mathbf{v}\, \mathrm{div}\mathbf{v}\, dV = \int_{S_c} \mathbf{t}\, dS + \int_{V_c} \rho \mathbf{B} dV \tag{i}$$

But

$$\frac{D}{Dt}\rho\mathbf{v} = \frac{D\rho}{Dt}\mathbf{v} + \rho\frac{D\mathbf{v}}{Dt} \tag{ii}$$

and

$$\frac{D\rho}{Dt} + \rho \operatorname{div}\mathbf{v} = 0 \tag{iii}$$

Therefore, Eq. (i) becomes

$$\int_{V_c} \rho\frac{D\mathbf{v}}{Dt}\, dV = \int_{S_c} \mathbf{t}\, dS + \int_{V_c} \rho\mathbf{B}\, dV \tag{7.6.3}$$

Since

$$\int_{V_c} \mathbf{t}\, dS = \int_{V_c} \mathbf{T}\mathbf{n}\, dS = \int_{V_c} \operatorname{div}\mathbf{T}\, dV \tag{iv}$$

therefore, we have

$$\int_{V_c} \left(\rho\frac{D\mathbf{v}}{Dt} - \operatorname{div}\mathbf{T} - \rho\mathbf{B}\right) dV = 0 \tag{7.6.4}$$

from which the following field equation of motion is obtained:

$$\rho\frac{D\mathbf{v}}{Dt} = \operatorname{div}\mathbf{T} + \rho\mathbf{B} \tag{7.6.5}$$

This is the same equation as Eq. (4.7.2).

We can also obtain the equation of motion in the reference state as follows:

Let ρ_o, dS_o, and dV_o denote the density, surface area and volume respectively at the reference time t_o for the differential material having ρ, dS and dV at time t, then the conservation of mass principle gives

$$\rho_o\, dV_o = \rho\, dV \tag{7.6.6}$$

and the definition of the stress vector $\mathbf{t}_0$ associated with the first Piola-Kirchhoff stress tensor gives [see Section 4.10]

$$\mathbf{t}_0\, dS_o = \mathbf{t}\, dS \tag{7.6.7}$$

Now, using Eqs. (7.6.6) and (7.6.7), Equation (7.6.3) can be transformed to the reference configuration. That is

$$\int_{V_o} \rho_o\frac{D\mathbf{v}}{Dt}\, dV_o = \int_{S_o} \mathbf{t}_o\, dS_o + \int_{V_o} \rho_o\, \mathbf{B}\, dV_o = \int_{S_o} \mathbf{T}_o\, \mathbf{n}_0\, dS_o + \int_{V_o} \rho_o\, \mathbf{B}\, dV_o \tag{7.6.8}$$

In the above equation, everything is a function of the material coordinates X_i and t, $\mathbf{T}_o$ is the first Piola-Kirchhoff stress tensor and $\mathbf{n_o}$ is the unit outward normal. Using the divergence theorem for the stress vector term, Eq. (7.6.8) becomes

$$\int_{V_o} \rho_o \frac{D\mathbf{v}}{Dt}\, dV_o = \int_{V_o} \mathrm{Div}\mathbf{T}_o\, dV_o + \int_{V_o} \rho_o \mathbf{B} dV_o \tag{7.6.9}$$

where in Cartesian coordinates, $\mathrm{Div}\mathbf{T_o} = \dfrac{\partial T_{ij}}{\partial X_j}$.

From Eq. (7.6.9) ,we obtain

$$\rho_o \frac{D\mathbf{v}}{Dt} = \mathrm{Div}\mathbf{T}_o + \rho_o \mathbf{B} \tag{7.6.10}$$

This is the same equation derived in Chapter 4, Eq. (4.11.6).

Example 7.6.1

A homogeneous rope of total length l and total mass m slides down from the corner of a smooth table. Find the motion of the rope and the tension at the corner.

Solution. Let x denote the portion of rope that has slid down the corner at time t. Then the portion that remains on the table at time t is $l-x$. Consider the control volume shown as $(V_c)_1$ in Figure 7.3. Then the momentum in the horizontal direction inside the control volume at any time t is, with $\dot{x}$ denoting dx/dt:

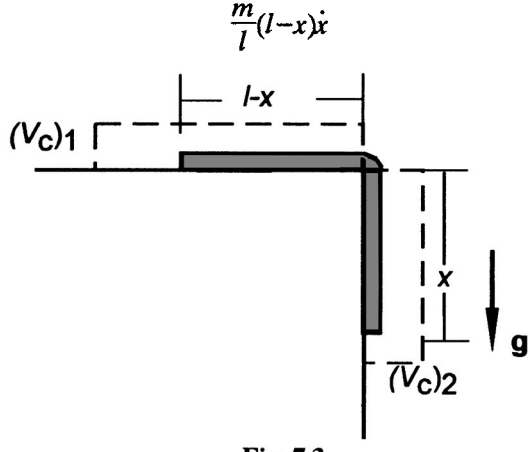

Fig. 7.3

and the net momentum outflux is

$$\left[\frac{m}{l}\dot{x}\right]\dot{x}$$

Thus, if T denotes the tension at the corner point of the rope at time t, we have

$$T = \frac{d}{dt}\left[\frac{m}{l}(l-x)\dot{x}\right] + \frac{m}{l}\dot{x}^2 = \frac{m}{l}(-\dot{x})\dot{x} + \frac{m}{l}(l-x)\ddot{x} + \frac{m}{l}\dot{x}^2 \tag{i}$$

i.e.,

$$T = \frac{m}{l}(l-x)\ddot{x} \tag{ii}$$

as expected.

On the other hand, by considering the control volume $(V_c)_2$ (see Fig. 7.3), we have, the momentum in the downward direction is $(m/l)x\dot{x}$ and the momentum influx in the same direction is $[(m/l)\dot{x}]\dot{x}$. Thus,

$$-T + \left(\frac{m}{l}x\right)g = \frac{d}{dt}\left(\frac{m}{l}x\dot{x}\right) - \frac{m}{l}\dot{x}^2 \tag{iii}$$

i.e.,

$$-T + \frac{m}{l}xg = \frac{m}{l}x\ddot{x} \tag{iv}$$

From Eqs. (ii) and (iv), we have

$$\frac{m}{l}(l-x)\ddot{x} = \frac{m}{l}xg - \frac{m}{l}x\ddot{x} \tag{v}$$

i.e.,

$$\ddot{x} - \frac{g}{l}x = 0 \tag{vi}$$

The general solution of Eq. (vi) is

$$x = C_1\exp[\sqrt{g/l}t] + C_2\exp[-\sqrt{g/l}t] \tag{vii}$$

Thus, if the rope starts from rest with an initial overhang of x_o, we have

$$x_o = C_1 + C_2 \text{ and } 0 = C_1 - C_2 \tag{viii}$$

so that $C_1 = C_2 = x_o/2$ and the solution is

$$x = \frac{x_o}{2}[\exp(\sqrt{g/l})t + \exp(-\sqrt{g/l}t) \tag{ix}$$

The tension at the corner is given by

$$T = \frac{m}{l}(l-x)\ddot{x} = \frac{m}{l}(l-x)\left(\frac{g}{l}x\right) \tag{x}$$

We note that the motion can also be obtained by considering the whole rope as a system. In fact, the total linear momentum of the rope at any time t is

$$\frac{m}{l}(l-x)\dot{x}\mathbf{e}_1+\frac{m}{l}x\dot{x}\mathbf{e}_2 \tag{xi}$$

its rate of change is

$$\frac{m}{l}[(l-x)\ddot{x}-\dot{x}^2]\mathbf{e}_1+\frac{m}{l}(x\ddot{x}+\dot{x}^2)\mathbf{e}_2 \tag{xii}$$

and the total resultant force on the rope is

$$\frac{m}{l}xg\mathbf{e}_2 \tag{xiii}$$

Thus, equating the force to the rate of change of momentum for the whole rope, we obtain

$$(l-x)\ddot{x}-\dot{x}^2 = 0 \tag{xiv}$$

and

$$x\ddot{x}+\dot{x}^2 = gx \tag{xv}$$

Eliminating $\dot{x}^2$ from the above two equations, we arrive at Eq. (vi) again.

Example 7.6.2

Figure 7.4 shows a steady jet of water impinging onto a curved vane in a tangential direction. Neglect the effect of weight and assume that the flow at the upstream region, section A, as well as at the downstream region, section B is a parallel flow with a uniform speed v_o. Find the resultant force (above that due to the atmospheric pressure) exerted on the vane by the jet. The volume flow rate is Q.

Solution. Let us take as control volume that portion of the jet bounded by the planes at A and B. Since the flow at A is assumed to be a parallel flow, therefore the stress vector on the plane A is normal to the plane with a magnitude equal to the atmospheric pressure which we take to be zero. [We recall that in the absence of gravity, the pressure is a constant along any direction which is perpendicular to the direction of a parallel flow (See Section 6.7)]. Thus, the only forces acting on the material in the control volume is that from the vane to the jet. Let **F** be the resultant of these forces. Since the flow is steady, the rate of increase of momentum

inside the control volume is zero. The rate of outflow of linear momentum across B is $\rho Q v_o(cos\theta \mathbf{e}_1 + \sin\theta \mathbf{e}_2)$ and the rate of inflow of linear momentum across A is $\rho Q v_o \mathbf{e}_1$. Thus

$$\mathbf{F} = \rho Q[v_o(\cos\theta - 1)\mathbf{e}_1 + v_o \sin\theta \mathbf{e}_2] \tag{i}$$

$$F_x = -\rho Q v_o(1-\cos\theta) \tag{iia}$$

$$F_y = \rho Q v_o \sin\theta \tag{iib}$$

and the force components on the vane by the jet are equal and opposite to F_x and F_y.

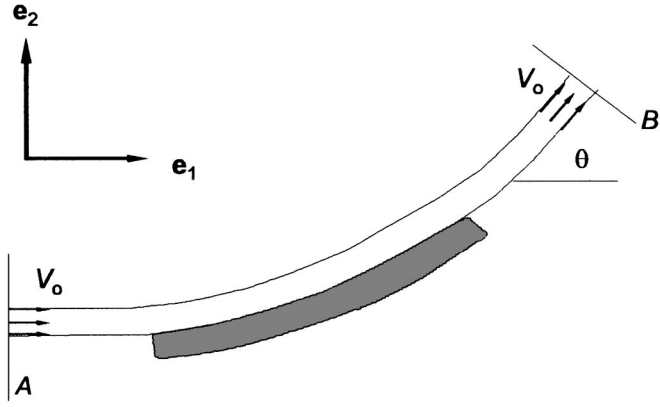

Fig. 7.4

Example 7.6.3

For boundary layer flow of water over a flat plate, if the velocity profile and that of the horizontal components at the leading and the trailing edges of the plate respectively are assumed to be those shown in Fig. 7.5, find the shear force acting on the fluid by the plate. Assume that the flow is steady and that the pressure is uniform in the whole flow.

Solution. Consider the control volume $ABCD$. Since the pressure is assumed to be uniform and since the flow outside of the boundary layer δ is essentially uniform in horizontal velocity component in x direction with very small vertical velocity components (so that the shearing stress on BC is negligible), therefore, the net force on the control volume is the shearing force from the plate. Denoting this force (per unit width in z direction) by $F\mathbf{e}_1$, we have from the momentum principle, Eq. (7.6.2)

$$F = \text{net out flux of x-momentum through } ABCD$$

i.e.,

$$F = \int_{S_c} v_1(\rho \mathbf{v}\cdot\mathbf{n})dS = -\int_0^{\delta} \bar{u}(\rho\bar{u})dy + \int_{BC} \bar{u}(\rho v_2)dS + \\ + \int_0^{\delta} \left(\frac{\bar{u}y}{\delta}\right)\rho\left(\frac{\bar{u}y}{\delta}\right)dy + \int_{AD}(0)dS \tag{i}$$

where $\bar{u}$ denotes the uniform horizontal velocity of the upstream flow and the uniform component of velocity at the trailing edge, v_1, and v_2 are the velocity components of the fluid particles on the surface S_c and δ is the thickness of the boundary layer. Thus,

$$F = -\rho\bar{u}^2\delta + \frac{\rho\bar{u}^2\delta}{3} + \bar{u}\int_{BC}(\rho v_2)dS \tag{ii}$$

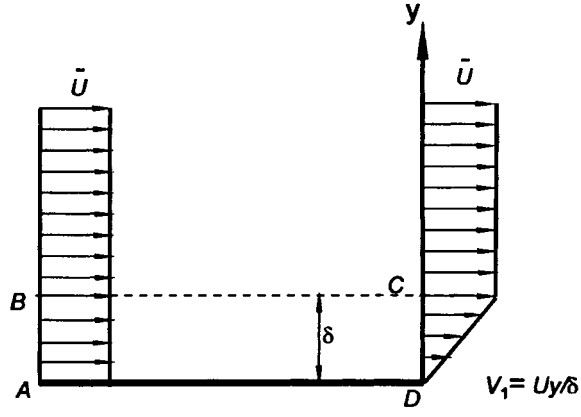

Fig. 7.5

From the principle of conservation of mass, we have

$$\int_{BC}(\rho v_2)dS - \int_0^{\delta}\rho\bar{u}dy + \int_0^{\delta}\rho\frac{\bar{u}}{\delta}ydy = 0 \tag{iii}$$

i.e.,

$$\int_{BC}(\rho v_2)dS = \rho\bar{u}\delta - \frac{\rho\bar{u}\,\delta}{2} = \frac{\rho\bar{u}\,\delta}{2} \tag{iv}$$

Thus,

$$F = -\rho\overline{u^2}\delta + \frac{\rho\overline{u^2}\delta}{3} + \frac{\rho\overline{u^2}\delta}{2} = -\frac{\rho\overline{u^2}\delta}{6} \tag{v}$$

That is, the force per unit width on the fluid by the plate is acting to the left with a magnitude of $\frac{\rho\overline{u^2}\delta}{6}$.

7.7 Moving Frames

There are certain problems, for which the use of a control volume fixed with respect to a frame moving relative to an inertial frame, is advantageous. For this purpose, we derive the momentum principle valid for a frame moving relative to an inertial frame.

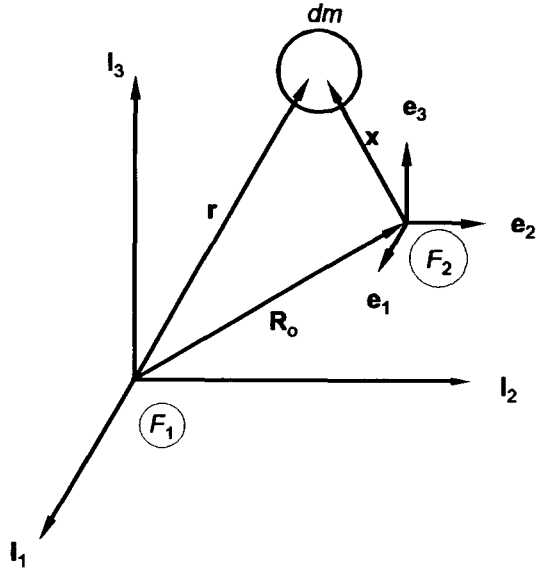

Fig. 7.6

Let F_1 and F_2 be two frames of references. Let $\mathbf{r}$ denote the position vector of a differential mass dm in a continuum relative to F_1 and let $\mathbf{x}$ denote the position vector relative to F_2 (see Fig. 7.6). Then the velocity of dm relative to F_1 is

$$\left(\frac{d\mathbf{r}}{dt}\right)_{F_1} \equiv \mathbf{v}_{F_1} \tag{7.1}$$

and the velocity relative to F_2 is

$$\left(\frac{d\mathbf{x}}{dt}\right)_{F_2} \equiv \mathbf{v}_{F_2} \tag{7.7.2}$$

Since

$$\mathbf{r} = \mathbf{R}_o + \mathbf{x} \tag{7.7.3}$$

thus,

$$\left(\frac{d\mathbf{r}}{dt}\right)_{F_1} = \left(\frac{d\mathbf{R}_o}{dt}\right)_{F_1} + \left(\frac{d\mathbf{x}}{dt}\right)_{F_1} \tag{i}$$

i.e.,

$$\mathbf{v}_{F_1} = (\mathbf{v}_o)_{F_1} + \left(\frac{d\mathbf{x}}{dt}\right)_{F_1} \tag{ii}$$

But, from a course in rigid body dynamics, we learned that for any vector **b**,

$$\left(\frac{d\mathbf{b}}{dt}\right)_{F_1} = \left(\frac{d\mathbf{b}}{dt}\right)_{F_2} + \boldsymbol{\omega}\times\mathbf{b} \tag{iii}$$

Where $\boldsymbol{\omega}$ is the angular velocity of F_2 relative to F_1. Thus,

$$\left(\frac{d\mathbf{x}}{dt}\right)_{F_1} = \left(\frac{d\mathbf{x}}{dt}\right)_{F_2} + \boldsymbol{\omega}\times\mathbf{x} = (\mathbf{v})_{\mathbf{F}_2} + \boldsymbol{\omega}\times\mathbf{x} \tag{iv}$$

Therefore,

$$\mathbf{v}_{F_1} = (\mathbf{v}_o)_{F_1} + \mathbf{v}_{F_2} + \boldsymbol{\omega}\times\mathbf{x} \tag{7.7.4}$$

Now, the linear momentum relative to F_1 is $\int \mathbf{v}_{F_1} dm$ and that relative to F_2 is $\int \mathbf{v}_{F_2} dm$. These rates of change of linear momentum are related in the following way: (for simplicity, we drop the subscript of the integral V_m)

$$\begin{aligned}\left(\frac{D}{Dt}\right)_{F_1} \int \mathbf{v}_{F_1} dm &= \left(\frac{D}{Dt}\right)_{F_1} [\,(\mathbf{v}_o)_{F_1} \int dm + \int \mathbf{v}_{F_2} dm + \boldsymbol{\omega}\times\int \mathbf{x} dm] \\ &= (\mathbf{a}_o)_{F_1} \int dm + \left(\frac{D}{Dt}\right)_{F_1} \int \mathbf{v}_{F_2} dm + \left(\frac{D}{Dt}\right)_{F_1} (\boldsymbol{\omega}\times\int \mathbf{x} dm)\end{aligned} \tag{7.7.5}$$

Now, again, using Eq. (iii) for the vector $\int \mathbf{v}_{F_2} dm$, we have

$$\left(\frac{D}{Dt}\right)_{F_1} \int \mathbf{v}_{F_2} dm = \left(\frac{D}{Dt}\right)_{F_2} \int \mathbf{v}_{F_2} dm + \boldsymbol{\omega}\times\int \mathbf{v}_{F_2} dm \tag{v}$$

and

$$\left(\frac{D}{Dt}\right)_{F_1}(\boldsymbol{\omega}\times\int \mathbf{x}\,dm) = \dot{\boldsymbol{\omega}}\times\int \mathbf{x}\,dm+\boldsymbol{\omega}\times\left(\frac{D}{Dt}\right)_{F_1}(\int \mathbf{x}\,dm)$$
$$= \dot{\boldsymbol{\omega}}\times\int \mathbf{x}\,dm+\boldsymbol{\omega}\times\int \mathbf{v}_{F_2}\,dm+\boldsymbol{\omega}\times(\boldsymbol{\omega}\times\int \mathbf{x}\,dm) \tag{vi}$$

Thus,

$$\left(\frac{D}{Dt}\right)_{F_1}(\int \mathbf{v}_{F_1}dm) = \left(\frac{D}{Dt}\right)_{F_2}\int \mathbf{v}_{F_2}dm+(\mathbf{a}_O)_{F_1}\int dm+2\boldsymbol{\omega}\times\int \mathbf{v}_{F_2}dm$$
$$+\dot{\boldsymbol{\omega}}\times\int \mathbf{x}dm+\boldsymbol{\omega}\times(\boldsymbol{\omega}\times\int \mathbf{x}dm) \tag{7.7.6}$$

Now, let F_1 be an inertial frame so that the momentum principle reads

$$\left(\frac{D}{Dt}\right)_{F_1}\int \mathbf{v}_{F_1}dm = \int \mathbf{t}\,dS+\int \rho\mathbf{B}\,dV \tag{7.7.7}$$

Using Eq. (7.7.6), the momentum principle [Eq. (7.7.7)] becomes

$$\left(\frac{D}{Dt}\right)_{F_2}\int_{V_m} \mathbf{v}_{F_2}dm = \int_{S_c} \mathbf{t}dS+\int_{V_c} \rho\mathbf{B}dV +$$
$$[-m\mathbf{a}_O-2\boldsymbol{\omega}\times\int \mathbf{v}_{F_2}dm-\dot{\boldsymbol{\omega}}\times\int \mathbf{x}dm-\boldsymbol{\omega}\times(\boldsymbol{\omega}\times\int \mathbf{x}dm)] \tag{7.7.8}$$

where $m = \int dm$.

Equation (7.7.8) shows that when a moving frame is used to compute momentum and its time rate of change, the same momentum principle for an inertial frame can be used provided we add those terms given inside the bracket in the right-hand side of Eq. (7.7.8) to the surface and body force terms.

7.8 Control Volume Fixed with respect to a Moving Frame

If a control volume is chosen to be fixed with respect to a frame of reference which moves relative to an inertial frame with an acceleration $\mathbf{a}_O$, an angular velocity $\boldsymbol{\omega}$ and angular acceleration $\dot{\boldsymbol{\omega}}$, the momentum equation is given by Eq. (7.7.8). If we now use the Reynold's transport theorem for the left-hand side of Eq. (7.7.8) , we obtain

$$\int_{V_c}\frac{\partial}{\partial t}(\rho\mathbf{v}_{F_2})dV+\int_{S_c}\rho\mathbf{v}_{F_2}(\mathbf{v}_{F_2}\cdot\mathbf{n})dS = \int_{S_c}\mathbf{t}\,dS+\int_{V_c}\rho\mathbf{B}dV +$$
$$[-m\mathbf{a}_O-2\boldsymbol{\omega}\times\int \mathbf{v}_{F_2}dm-\dot{\boldsymbol{\omega}}\times\int \mathbf{x}dm-\boldsymbol{\omega}\times(\boldsymbol{\omega}\times\int \mathbf{x}dm)] \tag{7.8.1}$$

In particular, if the control volume has only translation (acceleration = $\mathbf{a}_o$)with respect to the inertial frame and no rotations, then we have

$$\int_{V_c} \frac{\partial}{\partial t}(\rho \mathbf{v}_{F_2})dV + \int_{S_c} \rho \mathbf{v}_{F_2}(\mathbf{v}_{F_2}\cdot\mathbf{n})dS = \int_{S_c} \mathbf{t}\, dS + \int_{V_c} \rho \mathbf{B} dV - m\mathbf{a}_o \tag{7.8.2}$$

Example 7.8.1

A rocket of initial total mass M_o moves upward while ejecting a jet of gases at the rate of γ unit of mass per unit time. The exhaust velocity of the jet relative to the rocket is v_r and the gage pressure in the jet of area A is p. Derive the differential equation governing the motion of the rocket and find the velocity as a function of time. Neglect drag forces.

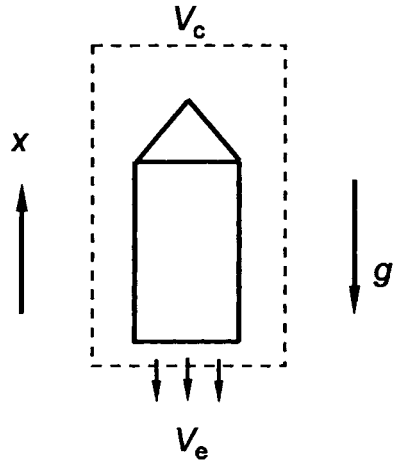

Fig. 7.7

Solution. Let V_r be a control volume which moves upward with the rocket. Then relative to V_r, the net x momentum outflux is $-\gamma v_e$. The motion of gases due to internal combustion does not produce any net momentum change relative to the rocket, therefore, there is no rate of change of momentum inside the control volume. The net surface force on the control volume is an upward force of pA and the body force is $(M_o-\gamma t)g$ downward. However, since the control volume is moving with the rocket which has an acceleration $\ddot{x}$, therefore, the term $\ddot{x}(M-\gamma t)$ is to be added to the other force terms [See Eq. (7.8.2)]. Thus,

$$-\gamma v_e = pA-(M_o-\gamma t)g-(M_o-\gamma t)\ddot{x} \tag{i}$$

i.e.,

$$(M_o-\gamma t)\ddot{x} = \gamma v_e+pA-(M_o-\gamma t)g \tag{ii}$$

This equation can be written

$$d\dot{x} = \frac{\gamma v_e+pA}{M_o-\gamma t}\,dt-g\,dt \tag{ii}$$

If at $t = 0$, $\dot{x} = 0$, then

$$\dot{x} = \frac{\gamma v_e+pA}{\gamma}\ln\left(\frac{M_o}{M_o-\gamma t}\right)-gt \tag{iii}$$

7.9 Principle of Moment of Momentum

The global principle of moment of momentum states that the total moment about a fixed point, of surface and body forces on a fixed part of material is equal to the time rate of change of total moment of momentum of the part about the same point. That is,

$$\frac{D}{Dt}\int_{V_m} \mathbf{x}\times\rho\mathbf{v}dV = \int_{S_c}(\mathbf{x}\times\mathbf{t})dS+\int_{V_c}\mathbf{x}\times\rho\mathbf{B}dV \tag{7.9.1}$$

where $\mathbf{x}$ is the position vector for a particle.

Using the Reynold's transport theorem, Eq. (7.4.2), the left side of Eq. (7.9.1) becomes

$$\frac{D}{Dt}\int_{V_m} \mathbf{x}\times\rho\mathbf{v}dV = \int_{V_c}\left[\frac{D}{Dt}(\mathbf{x}\times\rho\mathbf{v})+(\mathbf{x}\times\rho\mathbf{v})(\operatorname{div}\mathbf{v})\right]dV \tag{i}$$

Since

$$\frac{D}{Dt}(\mathbf{x}\times\rho\mathbf{v}) = \mathbf{v}\times\rho\mathbf{v}+\mathbf{x}\times\frac{D\rho}{Dt}\mathbf{v}+\mathbf{x}\times\rho\frac{D\mathbf{v}}{Dt} = \mathbf{x}\times\frac{D\rho}{Dt}\mathbf{v}+\mathbf{x}\times\rho\frac{D\mathbf{v}}{Dt} \tag{ii}$$

therefore the integrand in Eq. (i) becomes

$$\mathbf{x}\times\left(\frac{D\rho}{Dt}+\rho\operatorname{div}\mathbf{v}\right)\mathbf{v}+\mathbf{x}\times\rho\frac{D\mathbf{v}}{Dt} = \mathbf{x}\times\rho\frac{D\mathbf{v}}{Dt} \tag{iii}$$

Thus

$$\frac{D}{Dt}\int_{V_m} \mathbf{x}\times\rho\mathbf{v}dV = \int_{V_c}\left[\mathbf{x}\times\rho\frac{D\mathbf{v}}{Dt}\right]dV \tag{iv}$$

Also, from Example 7.2.2 of this chapter, we have

$$\int_{S_c}(\mathbf{x}\times\mathbf{t})dS=\int_{V_c}\left[\mathbf{x}\times(\mathrm{div}\mathbf{T})+2\,\mathbf{t}^A\right]dV \tag{v}$$

Therefore, Eq. (7.9.1) becomes

$$\mathbf{x}\times\int_{V_c}[\rho\frac{D\mathbf{v}}{Dt}-\mathrm{div}\mathbf{T}-\rho\mathbf{B}]dV-2\int_{V_c}\mathbf{t}^A dV=0 \tag{7.9.2}$$

where $\mathbf{t}^A$ is the axial vector of the antisymmetric part of the stress tensor $\mathbf{T}$. Now the first term in Eq. (7.9.2) vanishes because of Eq. (7.6.5), therefore, $\mathbf{t}^A=\mathbf{0}$ and the symmetry of the stress tensor

$$\mathbf{T}=\mathbf{T}^T \tag{7.9.4}$$

is obtained.

On the other hand, if we use the Reynold's transport theorem, Eq. (7.4.1), for the left side of Eq. (7.9.1), we obtain

$$\int_{S_c}\mathbf{x}\times\mathbf{t}dS+\int_{V_c}\mathbf{x}\times\rho\mathbf{B}dV=\int_{V_c}\frac{\partial}{\partial t}(\mathbf{x}\times\rho\mathbf{v})dV+\int_{S_c}(\mathbf{x}\times\rho\mathbf{v})(\mathbf{v}\cdot\mathbf{n})dS \tag{7.9.4}$$

That is, **the total moment about a fixed point due to surface and body forces acting on the material instantaneously inside a control volume = total rate of change of moment of momenta inside the control volume + total net rate of outflow of moment of momenta across the control surface**

If the control volume is fixed in a moving frame, then the following terms should be added to the left side of Eq. (7.9.4)

$$-(\int\mathbf{x}dm)\times\mathbf{a}_o-\int\mathbf{x}\times(\dot{\boldsymbol{\omega}}\times\mathbf{x})dm-\int\mathbf{x}\times[\boldsymbol{\omega}\times(\boldsymbol{\omega}\times\mathbf{x})]dm-2\int\mathbf{x}\times(\boldsymbol{\omega}\times\mathbf{v})\,dm \tag{7.9.5}$$

where $\boldsymbol{\omega}$ and $\dot{\boldsymbol{\omega}}$ are absolute angular velocity and acceleration of the moving frame (and of the control volume), the vector $\mathbf{x}$ of (dm) is measured from the arbitrary chosen point O in the control volume, $\mathbf{a}_o$ is the absolute acceleration of point O and $\mathbf{v}$ is the velocity of (dm) relative to the control volume.

Example 7.9.1

Each sprinkler arm in Fig. 7.8 discharges a constant volume of water Q and is free to rotate around the vertical center axis. Determine its constant speed of rotation.

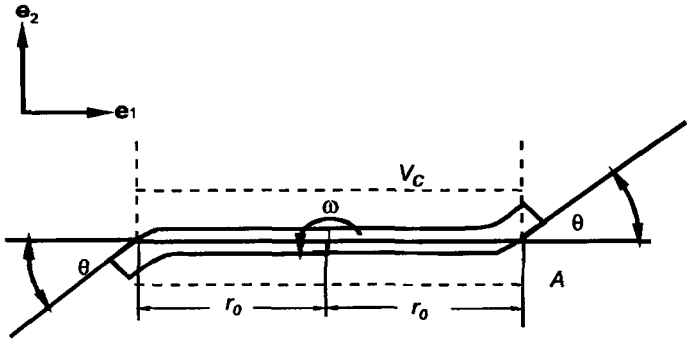

Fig. 7.8

Solution. Let V_c be a control volume that rotates with the sprinkler arms. The velocity of water particles relative to the sprinkler is $(Q/A)\mathbf{e}_1$ inside the right arm and $(Q/A)(-\mathbf{e}_1)$ inside the left arm. If ρ is density, then the total net outflux of moment of momentum about point O is $2\rho Q(Q/A)\sin\theta r_o\mathbf{e}_3$. The moment of momentum about O due to weight is zero. Since the pressure in the water jet is the same as the atmospheric pressure, taken to be zero gage pressure, there is no contribution due to surface force on the control volume. Now, since the control volume is rotating with the sprinkler, therefore, we need to add those terms given in Eq. (7.9.5) to the moment of forces. With $\mathbf{x}$ measured from O, the first term of Eq. (7.9.5) is zero, with $\boldsymbol{\omega}$ a constant, the second term of Eq. (7.9.5) is zero, with $\mathbf{x}=x\mathbf{e}_1$ and $\boldsymbol{\omega} = \omega\mathbf{e}_3$, the third term of Eq. (7.9.5) is zero. Thus, the only nonzero term is

$$-2\int \mathbf{x}\times(\boldsymbol{\omega}\times\mathbf{v})dm \tag{i}$$

which is the moment due to the Coriolis forces. Now, for the right arm, $\mathbf{v} = (Q/A)\mathbf{e}_1$, therefore,

$$\boldsymbol{\omega}\times\mathbf{v} = \omega\mathbf{e}_3\times\frac{Q}{A}\mathbf{e}_1 = \frac{\omega Q}{A}\mathbf{e}_2 \tag{ii}$$

and

$$\mathbf{x}\times(\boldsymbol{\omega}\times\mathbf{v}) = x\mathbf{e}_1\times\frac{\omega Q}{A}\mathbf{e}_2 = \frac{x\omega Q}{A}\mathbf{e}_3 \tag{iii}$$

Thus, the contribution from the fluid in the right arm to the integral in Eq. (i) is

$$-\frac{2\omega Q}{A}\mathbf{e}_3\int_o^{r_o} x(\rho A dx) = -\omega Q\rho r_o^2\mathbf{e}_3 \tag{iv}$$

Including that due to the left arm, the integral has the value of $-2\omega Q\rho r_o^2\mathbf{e}_3$. Therefore, from the moment of momentum principle for a moving control volume, we have

$$2\rho Q\left(\frac{Q}{A}\right)\sin\theta r_o = -2\omega Q\rho r_o^2 \tag{v}$$

from which

$$\omega = -\frac{Q}{A}\frac{\sin\theta}{r_o} \tag{vi}$$

7.10 Principle of Conservation of Energy

The principle of conservation of energy states that the time rate of change of the kinetic energy and internal energy for a fixed part of material is equal to the sum of the rate of work done by the surface and body forces and the heat energy entering the boundary surface. That is, if v^2 denotes $\mathbf{v}\cdot\mathbf{v}$, u the internal energy per unit mass, and $\mathbf{q}$ the rate of heat flow vector across a unit area, then the principle states:

$$\frac{D}{Dt}\int_{V_m}(\rho\frac{v^2}{2}+\rho u)dV = \int_{S_c}\mathbf{t}\cdot\mathbf{v}dS+\int_{V_m}\rho\mathbf{B}\cdot\mathbf{v}\,dV-\int_{S_c}\mathbf{q}\cdot\mathbf{n}\,dS \tag{7.10.1}$$

the minus sign in the last term is due to the convention that $\mathbf{n}$ is an outward unit normal vector and therefore $-\mathbf{q}\cdot\mathbf{n}$ represents inflow.

Again, using the Reynold's transport theorem Eq. (7.4.2), we have

$$\frac{D}{Dt}\int_{V_m}\rho(\frac{v^2}{2}+u)dV = \int_{V_c}\left[\frac{D}{Dt}\rho(\frac{v^2}{2}+u)+\rho(\frac{v^2}{2}+u)\mathrm{div}\mathbf{v}\right]dV$$

$$= \int_{V_c}\left[\rho\frac{D}{Dt}(\frac{v^2}{2}+u)+(\frac{v^2}{2}+u)(\frac{D\rho}{Dt}+\rho\mathrm{div}\mathbf{v})\right]dV = \int_{V_c}\left[\rho\frac{D}{Dt}(\frac{v^2}{2}+u)\right]dV \tag{i}$$

In Example 7.2.3 we obtained that

$$\int_{S_c}\mathbf{t}\cdot\mathbf{v}dS = \int_{V_c}[(\mathrm{div}\mathbf{T})\cdot\mathbf{v} + \mathrm{tr}\,(\mathbf{T}^T\nabla\mathbf{v})]dV \tag{ii}$$

Also, the divergence theorem gives

$$\int_{S_c}\mathbf{q}\cdot\mathbf{n}dS = \int_{V_c}\mathrm{div}\,\mathbf{q}\,dV \tag{iii}$$

Thus, using Eqs. (i)(ii) and (iii), Eq. (7.10.1) becomes

$$\int_{V_c} \rho \frac{D}{Dt}\left(\frac{v^2}{2}+u\right) dV = \int_{V_c} [(\text{div}\mathbf{T}+\rho\mathbf{B})\cdot\mathbf{v}+\text{tr}(\mathbf{T}^T\nabla\mathbf{v})-\text{div}\mathbf{q}]dV \tag{7.10.2}$$

Since

$$(\text{div}\mathbf{T}+\rho\mathbf{B})\cdot\mathbf{v} = \rho\frac{D\mathbf{v}}{Dt}\cdot\mathbf{v} = \frac{1}{2}\rho\frac{Dv^2}{Dt} \tag{iv}$$

Therefore, Eq. (7.10.2) becomes

$$\int_{V_c} \rho\frac{Du}{Dt}dV = \int_{V_c} [\text{tr}(\mathbf{T}^T\nabla\mathbf{v})-\text{div}\,\mathbf{q}\,]dV \tag{v}$$

Thus, at every point, we have

$$\rho\frac{Du}{Dt} = \text{tr}(\mathbf{T}^T\nabla\mathbf{v})-\text{div}\,\mathbf{q} \tag{7.10.3a}$$

For a symmetry tensor $\mathbf{T}$, this equation can also be written

$$\rho\frac{Du}{Dt} = \text{tr}(\mathbf{T}\nabla\mathbf{v})-\text{div}\,\mathbf{q} \tag{7.10.3b}$$

Equations (7.10.3a) or (7.10.3b) is the energy equation. A slightly different form of Eq. (7.10.3b) can be obtained if we recall that $\nabla\mathbf{v} = \mathbf{D}+\mathbf{W}$, where $\mathbf{D}$, the symmetric part of $\nabla\mathbf{v}$ is the rate of deformation tensor, and $\mathbf{W}$, the antisymmetric part of $\nabla\mathbf{v}$, is the spin tensor. We have

$$\text{tr}(\mathbf{T}\nabla\mathbf{v}) = \text{tr}(\mathbf{TD}+\mathbf{TW}) = \text{tr}(\mathbf{TD})+\text{tr}(\mathbf{TW}) \tag{vi}$$

But $\text{tr}(\mathbf{TW}) = T_{ij}W_{ji} = T_{ji}W_{ji} = T_{ij}W_{ij} = -T_{ij}W_{ji}$, so that

$$\text{tr}(\mathbf{TW}) = 0 \tag{vii}$$

therefore, we rediscover the energy equation in the following form:

$$\rho\frac{Du}{Dt} = \text{tr}(\mathbf{TD})-\text{div}\mathbf{q} \tag{7.10.4}$$

On the other hand, if we use the Reynold's theorem in the form of Eq. (7.4.1), we obtain

$$\int_{S_c} \mathbf{t}\cdot\mathbf{v}dS+\int_{V_m} \rho\mathbf{B}\cdot\mathbf{v}\,dV-\int_{S_c} \mathbf{q}\cdot\mathbf{n}\,dS = \int_{V_m} \frac{\partial}{\partial t}\,\rho(\frac{v^2}{2}+u)\,dV+\int_{V_m} \rho(\frac{v^2}{2}+u)(\mathbf{v}\cdot\mathbf{n})dS \tag{10.5}$$

Equation (10.5) states that **the time rate of work done by surface and body forces in a control volume + rate of heat input = total rate of increase of internal and kinetic energy of the material inside the control volume + rate of outflow of the internal and kinetic energy across the control surface**

Example 7.10.1

A supersonic one-dimensional flow in an insulating duct suffers a normal compression shock. Assuming ideal gas, find the pressure after the shock in terms of the pressure and velocity before the shock.

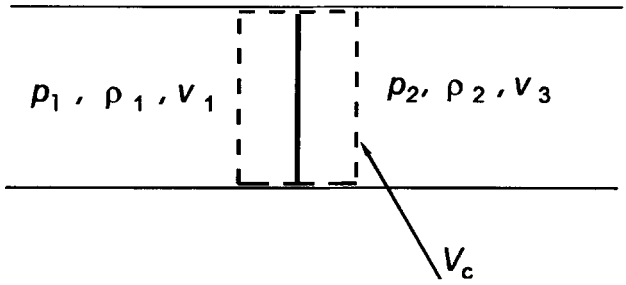

Fig. 7.9

Solution For the control volume shown, we have, for steady flow:

(1) Mass outflux = mass influx, that is

$$\rho_1 A v_1 = \rho_2 A v_2 \tag{i}$$

i.e.,

$$\rho_1 v_1 = \rho_2 v_2 \tag{ii}$$

(2) Force in x direction = net momentum outflux in x direction

$$p_1 A - p_2 A = (\rho_2 A v_2) v_2 - (\rho_1 A v_1) v_1 \tag{iii}$$

i.e.,

$$(p_1 - p_2) = \rho_2 v_2^2 - \rho_1 v_1^2 \tag{iv}$$

(3) Rate of work done by surface force = net energy (internal and kinetic) outflux. That is

$$p_1 A v_1 - p_2 A v_2 = [(\rho_2 A v_2) u_2 - (\rho_1 A v_1) u_1] + \left[\frac{1}{2}(\rho_2 A v_2) v_2^2 - \frac{1}{2}(\rho_1 A v_1) v_1^2\right] \tag{v}$$

For ideal gas, the internal energy per unit mass is given by, [see Eq. (6.26.10)]

$$u = \frac{p}{\rho}\left(\frac{1}{\gamma - 1}\right) \tag{vi}$$

where $\gamma = c_p / c_v$ is the ratio of specific heats. Thus, Eq. (v) becomes

$$p_1v_1 - p_2v_2 = p_2v_2\left(\frac{1}{\gamma - 1}\right) - p_1v_1\left(\frac{1}{\gamma - 1}\right) + \frac{1}{2}\rho_2v_2^3 - \frac{1}{2}\rho_1v_1^3 \tag{vii}$$

0r,

$$\frac{\gamma}{\gamma - 1}p_1v_1 + \frac{1}{2}\rho_1v_1^3 = \frac{\gamma}{\gamma - 1}p_2v_2 + \frac{1}{2}\rho_2v_2^3 \tag{viii}$$

that is

$$\rho_1v_1\left[\frac{\gamma}{\gamma - 1}\frac{p_1}{\rho_1} + \frac{1}{2}v_1^2\right] = \rho_2v_2\left[\frac{\gamma}{\gamma - 1}\frac{p_2}{\rho_2} + \frac{1}{2}v_2^2\right] \tag{ix}$$

In view of Eq. (ii), this equation becomes

$$\frac{\gamma}{\gamma - 1}\frac{p_1}{\rho_1} + \frac{1}{2}v_1^2 = \frac{\gamma}{\gamma - 1}\frac{p_2}{\rho_2} + \frac{1}{2}v_2^2 \tag{x}$$

We note here that this is the same energy equation derived in Chapter 6 (Example 6.28.1) using differential forms of energy equation for an inviscid nonheat-conducting fluid. From Eqs. (ii)(iv) and (x) we obtain

$$p_2 = \frac{1}{\gamma + 1}[2\rho_1v_1^2 - (\gamma - 1)p_1] \tag{xi}$$

PROBLEMS

7.1. Verify the divergence theorem for the vector field $\mathbf{v} = 2x\mathbf{e}_1 + z\,\mathbf{e}_2$, by considering the region bounded by $x = 0, x = 2, y = 0, y = 2, z = 0, z = 2$.

7.2. Show that

$$\int_S \mathbf{x}\cdot\mathbf{n}dS = 3V$$

where V is the volume enclosed by the boundary S.

7.3. (a) Consider the vector field $\mathbf{v} = \varphi\mathbf{a}$, where φ is a given scalar field and $\mathbf{a}$ is an arbitrary constant vector (independent of position). Using the divergence theorem, prove that

$$\int_V \nabla\varphi\, dV = \int_S \varphi\,\mathbf{n}\, dS$$

(b) Show that for any closed surface S that

$$\int_S \mathbf{n}\, dS = 0$$

7.4. A stress field $\mathbf{T}$ is in equilibrium with a body force $\rho\mathbf{B}$. Using the divergence theorem, show that for any volume V, and boundary surface S, that

$$\int_S \mathbf{t}\, dS + \int_V \rho\mathbf{B}\, dV = 0$$

That is, the total resultant force is equipollent to zero.

7.5. Let $\mathbf{u}^*$ define an infinitesimal strain field $\mathbf{E}^* = \frac{1}{2}(\nabla\mathbf{u}^* + (\nabla\mathbf{u}^*)^T)$ and let $\mathbf{T}^{**}$ be in equilibrium with a body force $\rho\,\mathbf{B}^{**}$ and a surface traction $\mathbf{t}^{**}$. Using the divergence theorem, verify the identity (theorem of virtual work)

$$\int_S \mathbf{t}^{**}\cdot\mathbf{u}^*\, dS + \int_V \rho\mathbf{B}^{**}\cdot\mathbf{u}^* dV = \int_V T_{ij}^{**}E_{ij}^* dV$$

7.6. Using the equations of motion and the divergence theorem, verify the following rate of work identity

$$\int_V \rho\,\mathbf{B}\cdot\mathbf{v}dV + \int_S \mathbf{t}\cdot\mathbf{v}\, dS = \int_V \rho\frac{D}{Dt}\left(\frac{v^2}{2}\right)dV + \int_V T_{ij}D_{ij}dV$$

7.7. Consider the velocity and density fields

$$\mathbf{v} = x_1\mathbf{e}_1, \quad \rho = \rho_o e^{-t}$$

(a) Check the equation of mass conservation.

(b) Compute the mass and rate of increase of mass in the cylindrical control volume of cross-section A and bounded by $x_1 = 0$ and $x_1 = 3$.

(c) Compute the net mass inflow into the control volume of part (b). Does the net mass inflow equal the rate of mass increase?

7.8. (a) Check that the motion

$$x_1 = X_1 e^{t-t_o}, \quad x_2 = X_2, \quad x_3 = X_3$$

corresponds to the velocity field of Prob. 7.7.

(b) For a density field $\rho = \rho_o e^{-(t-t_o)}$, verify that the mass contained in the material volume that was coincident with the control volume of Prob. 7.7 at time t_o, remain a constant.

(c) Compute the total linear momentum for the material volume of part (b).

7.9. Do Problem 7.7 for the velocity field $\mathbf{v} = x_1 \mathbf{e}_1$ and the density field $\rho = \dfrac{\rho_o}{x_1}$ and for the cylindrical control volume bounded by $x_1 = 1$ and $x_1 = 3$.

7.10. The center of mass $\mathbf{x}_{cm}$ of a material volume is defined by the equation

$$m\mathbf{x}_{cm} = \int_{V_m} \mathbf{x}\rho dV, \qquad \text{where } m = \int_{V_m} \rho dV$$

Demonstrate that the linear momentum principle may be written in the form

$$\int_{S_c} \mathbf{t}\, dS + \int_{V_c} \rho \mathbf{B} dV = m\mathbf{a}_{cm}$$

where $\mathbf{a}_{cm}$ is the acceleration of the mass center.

7.11. Consider the following velocity field and density field

$$\mathbf{v} = \left(\frac{x_1}{1+t}\right)\mathbf{e}_1, \quad \rho = \frac{\rho_o}{1+t}$$

(a) Compute the total linear momentum and rate of increase of linear momentum in a cylindrical control volume of cross-sectional area A and bounded by the plane $x_1 = 1$ and $x_1 = 3$.

(b) Compute the net rate of outflow of linear momentum from the control volume of part (a).

(c) Compute the total force on the material in the control volume.

(d) Compute the total kinetic energy and rate of increase of kinetic energy for the control volume of part (a).

(e) Compute the net rate of outflow of kinetic energy from the control volume.

7.12. Consider the velocity and density fields

$$\mathbf{v} = x_1 \mathbf{e}_1, \quad \rho = \rho_o e^{-t}$$

For an arbitrary time t, consider the material contained in the cylindrical control volume bounded by $x_1 = 0$ and $x_1 = 3$.

(a) Determine the linear momentum and rate of increase of linear momentum in this control volume.

(b) Determine the outflux of linear momentum.

(c) Determine the net resultant force that is acting on the material contained in the control volume.

7.13. Do Problem 7.12 for the same velocity field, with $\rho = \dfrac{\rho_o}{x_1}$ and the cylindrical control volume bounded by $x_1 = 1$ and $x_1 = 3$.

7.14. Consider the flow field $\mathbf{v} = x\mathbf{e}_1 - y\mathbf{e}_2$ with $\rho =$ constant. For a control volume defined by $x = 0, x = 2, y = 0, y = 2, z = 0, z = 2$ determine the net resultant force and couple that is acting on the material contained in this volume.

7.15. Do Problem 7.14 for the control volume defined by $x = 2, y = 2, xy = 2, z = 0, z = 2$.

7.16. For Hagen-Poiseuille flow in a pipe

$$\mathbf{v} = C(r_o^2 - r^2)\mathbf{e}_1$$

calculate the momentum flux across a cross-section. For the same flow rate, if the velocity is assumed to be uniform, what is the momentum flux across a cross section ? Compare the two results.

7.17. A pile of chain on a table falls through a hole from the table under the action of gravity. Derive the differential equation governing the hanging length x.

7.18. A water jet of 5 cm. diameter moves at 12 m/sec, impinges on a curved vane which deflects it 60° from its direction. Neglect the weight. Obtain the force exerted by the liquid on the vane.

7.19. A horizontal pipeline of 10 cm. diameter bends through 90°, and while bending, changes its diameter to 5 cm. The pressure in the 10 cm. pipe is 140 kPa. Estimate the resultant force on the bends when 0.05 m^3/sec of water is flowing in the pipeline.

7.20. Figure P7.1 shows a steady water jet of area A impinging onto the flat wall. Find the force exerted on the wall. Neglect weight and viscosity of water.

7.21. Frequently in open channel flow, a high speed flow "jumps" to a low speed flow with an abrupt rise in the water surface. This is known as a hydraulic jump. Referring to Fig.P7.2 , if the flow rate is Q per unit width, find the relation between y_1 and y_2. Assume the flow before and after the jump is uniform and the pressure distribution is hydrostatic.

7.22. If the curved vane of Example. 7.6.2 moves with a velocity $v < v_o$ in the same direction as the oncoming jet, find the resultant force exerted on the vane by the jet.

7.23. For the half-arm sprinkler shown in Fig.P7.3 , find the angular speed if $Q =$ 0.566 m^3/sec. Neglect friction.

7.24. The tank car shown in Fig.P7.4 contains water and compressed air which is regulated to force a water jet out of the nozzle at a constant rate of Q m^3/s. The diameter of the jet is d cm. the initial total mass of the tank car is M_o. Neglecting frictional forces, find the velocity of the car as a function of time.

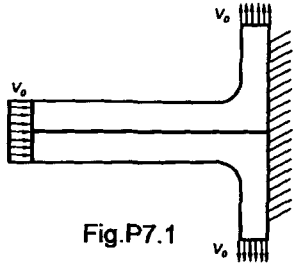

Fig.P7.1

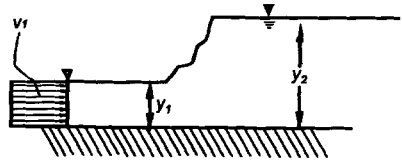

Fig.P7.2

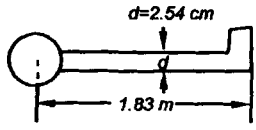

Fig.P7.3

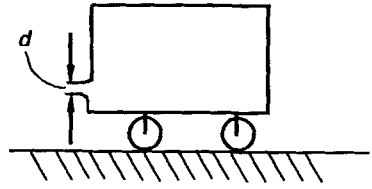

Fig.P7.4