5

The Elastic Solid

So far we have studied the kinematics of deformation, the description of the state of stress and four basic principles of continuum physics: the principle of conservation of mass [Eq. (3.15.2)], the principle of linear momentum [Eq. (4.7.2)], the principle of moment of momentum [Eq. (4.4.1)] and the principle of conservation of energy [Eq. (4.14.1)]. All these relations are valid for every continuum, indeed no mention was made of any material in the derivations.

These equations are however not sufficient to describe the response of a specific material due to a given loading. We know from experience that under the same loading conditions, the response of steel is different from that of water. Furthermore, for a given material, it varies with different loading conditions. For example, for moderate loadings, the deformation in steel caused by the application of loads disappears with the removal of the loads. This aspect of the material behavior is known as **elasticity**. Beyond a certain level of loading, there will be permanent deformations, or even fracture exhibiting behavior quite different from that of elasticity. In this chapter, we shall study idealized materials which model the elastic behavior of real solids. The linear isotropic elastic model will be presented in part A, followed by the linear anisotropic elastic model in part B and an incompressible isotropic nonlinear elastic model in part C.

5.1 Mechanical Properties

We want to establish some appreciation of the mechanical behavior of solid materials. To do this, we perform some thought experiments modeled after real laboratory experiments.

Suppose from a block of material, we cut out a slender cylindrical test specimen of cross-sectional area A. The bar is now statically tensed by an axially applied load P, and the elongation Δl, over some axial gage length l, is measured. A typical plot of tensile force against elongation is shown in Fig. 5.1. Within the linear portion OA (sometimes called the proportional range), if the load is reduced to zero (i.e., unloading), then the line OA is retraced back to O and the specimen has exhibited an elasticity. Applying a load that is greater than A and then unloading, we typically traverse $OABC$ and find that there is a "permanent elongation" OC. Reapplication of the load from C indicates elastic behavior with the same slope as OA, but with an increased proportional limit. The material is said to have work-hardened.

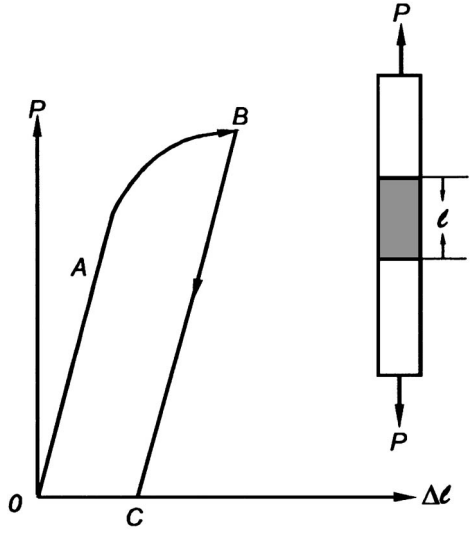

Fig. 5.1

The load-elongation diagram in Fig. 5.1 depends on the cross-section of the specimen and the axial gage length l. In order to have a representation of material behavior which is independent of specimen size and variables introduced by the experimental setup, we may plot the stress $\sigma = P/A_o$, where A_o is the undeformed area of the cross-section versus the axial strain $\varepsilon_a = \Delta l/l$ as shown in Fig. 5.2. In this way, the test results appear in a form which is not dependent on the specimen dimensions. The slope of the line OA will therefore be a material coefficient which is called the **Young's modulus** (or, **modulus of elasticity**)

$$E_Y = \frac{\sigma}{\varepsilon_a} \tag{5.1.1}$$

The numerical value of E_Y for steel is around 207 GPa (30×10^6 psi). This means for a steel bar of cross-sectional area 32.3 cm^2 (5 in^2)that carries a load of 667,000 N (150,000 lbs), the axial strain is

$$\varepsilon_a = \frac{667200/(32.3\times10^{-4})}{207\times10^9} \approx 10^{-3} \tag{i}$$

As expected, the strains in the linear elastic range of metals are quite small and we can therefore, use infinitesimal strain theory to describe the deformation of metals.

In the tension test, we can also measure changes in the lateral dimension. If the bar is of circular cross section with an initial diameter d , it will remain, under certain conditions circular, decreasing in diameter as the tensile load is increased . Letting ε_d be the lateral strain

(equal to $\Delta d/d$), we find that the ratio $-\varepsilon_d/\varepsilon_a$ is a constant if the strains are small. We call this constant Poisson's ratio and denote it by ν. A typical value of ν for steel is 0.3.

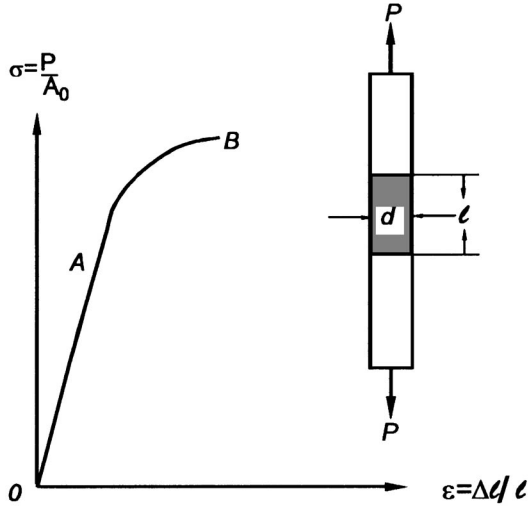

Fig. 5.2

So far we have only been considering a single specimen out of the block of material. It is conceivable that the modulus of elasticity E_Y, as well as Poisson's ratio ν may depend on the orientation of the specimen relative to the block. In this case, the material is said to be **anisotropic** with respect to its elastic properties. Anisotropic properties are usually exhibited by materials with a definite internal structure such as wood or a rolled steel plate or composite materials. If the specimens, cut at different orientations at a sufficiently small neighborhood, show the same stress-strain diagram, we can conclude that the material is **isotropic** with respect to its elastic properties in that neighborhood.

In addition to a possible dependence on orientation of the elastic properties, we may also find that they may vary from one neighborhood to the other. In this case, we call the material **inhomogeneous.** If there is no change in the test results for specimens at different neighborhoods, we say the material is **homogeneous.**

Previously, we stated that the circular cross-section of a bar can remain circular in the tension test. This is true when the material is homogeneous and isotropic with respect to its elastic properties.

Other characteristic tests with an elastic material are also possible. In one case, we may be interested in the change of volume of a block of material under hydrostatic stress σ for which the stress state is

$$T_{ij} = \sigma\,\delta_{ij} \tag{5.1.2}$$

In a suitable experiment, we measure the relation between σ, the applied stress and e, the change in volume per initial volume (also known as **dilatation**, see Eq. (3.10.2)). For an elastic material, a linear relation exists for small e and we define the **bulk modulus** k, as

$$k = \frac{\sigma}{e} \tag{5.1.3}$$

A typical value of k for steel is 138 GPa (20×10^6 psi).

A torsion experiment yields another elastic constant. For example, we may subject a cylindrical steel bar of circular cross-section of radius r to a torsional moment M_t along the cylinder axis. The bar has a length l and will twist by an angle θ upon the application of the moment M_t. A linear relation between the angle of twist θ and the applied moment will be obtained for small θ. We define a **shear modulus** μ

$$\mu = \frac{M_t l}{I_p \theta} \tag{5.1.4}$$

where $I_p = \pi r^4/2$ (the polar area moment of inertia). A typical value of μ for steel is 76 GPa (11×10^6 psi).

For an anisotropic elastic solid, the values of these material coefficients (or material constants) depend on the orientation of the specimen prepared from the block of material. Inasmuch as there are infinitely many orientations possible, an important and interesting question is how many coefficients are required to define completely the mechanical behavior of a particular elastic solid. We shall answer this question in the following section.

5.2 Linear Elastic Solid

Within certain limits, the experiments cited in Section 5.1 have the following features in common:

(a) The relation between the applied loading and a quantity measuring the deformation is linear

(b) The rate of load application does not have an effect.

(c) Upon removal of the loading, the deformations disappear completely.

(d) The deformations are very small.

The characteristics (a) through (d) are now used to formulate the constitutive equation of an ideal material, the linear elastic or Hookean elastic solid. The constitutive equation relates the stress to relevant quantities of deformation. In this case, deformations are small and the rate of load application has no effect. We therefore can write

$$\mathbf{T} = \mathbf{T}(\mathbf{E}) \tag{5.2.1}$$

where **T** is the Cauchy stress tensor, **E** is the infinitesimal strain tensor, with **T** (**0**) = **0**. If in addition, the function is to be linear, then we have, in component form

$$
\begin{aligned}
T_{11} &= C_{1111} E_{11} + C_{1112} E_{12} + \ldots + C_{1133} E_{33} \\
T_{12} &= C_{1211} E_{11} + C_{1212} E_{12} + \ldots + C_{1233} E_{33} \\
&\ldots\ldots\ldots\ldots\ldots\ldots\ldots\ldots\ldots\ldots \\
T_{33} &= C_{3311} E_{11} + C_{3312} E_{12} + \ldots + C_{3333} E_{33}
\end{aligned}
\tag{5.2.2a}
$$

The above nine equations can be written compactly as

$$T_{ij} = C_{ijkl} E_{kl} \tag{5.2.2b}$$

Since T_{ij} and E_{ij} are components of second-order tensors, from the quotient rule discussed in Sect. 2B14, we know that C_{ijkl} are components of a fourth-order tensor, here known as the **elasticity tensor**. The values of these components with respect to the primed basis $\mathbf{e}_i'$ and the unprimed basis $\mathbf{e}_i$ are related by the transformation law

$$C_{ijkl}' = Q_{mi} Q_{nj} Q_{rk} Q_{sl} C_{mnrs} \tag{5.2.3}$$

(See Sect. 2B14). If the body is homogeneous, that is, the mechanical properties are the same for every particle in the body, then C_{ijkl} are constants (i.e., independent of position). We shall be concerned only with homogeneous bodies.

There are 81 coefficients in Eq. (5.2.2). However, since $E_{ij} = E_{ji}$, we can always combine the sum of two terms such as $C_{1112} E_{12} + C_{1121} E_{21}$ into one term, $(C_{1112} + C_{1121}) E_{12}$ so that $(C_{1112} + C_{1121})$ becomes *one* independent coefficient. Equivalently, we can simply take $C_{1112} = C_{1121}$. Thus, due to the symmetry of strain tensor, we have

$$C_{ijkl} = C_{ijlk} \tag{5.2.4}$$

Eqs. (5.2.4) reduce the number of independent C_{ijkl} from 81 to 54.

We shall consider only the cases where the stress tensor is symmetric, i.e.,

$$T_{ij} = T_{ji}. \tag{5.2.5}$$

as a consequence,

$$C_{ijkl} = C_{jikl} \tag{5.2.6}$$

Eqs. (5.2.6) further reduce the number of independent coefficient by 18. Thus, we have for the general case of a linear elastic body a maximum of 36 material coefficients.

Furthermore, we shall assume that the concept of "elasticity" is associated with the existence of a **stored energy function** $U(E_{ij})$, also known as the **strain energy function**, which is a positive definite† function of the strain components such that

$$T_{ij} = \frac{\partial U}{\partial E_{ij}} \tag{5.2.7}$$

With such an assumption, (the motivation for Eq. (5.2.7) is given in Example 5.2.1), it can be shown (see Example 5.2.2 below) that

$$C_{ijkl} = C_{klij} \tag{5.2.8}$$

Equations (5.2.8) reduces the number of elastic coefficients from 36 to 21.

Example 5.2.1

(a)In the infinitesimal theory of elasticity, both the displacement components and the components of the displacement gradient are assumed to be very small. Show that under these assumptions, the rate of deformation tensor **D** can be approximated by $D\mathbf{E}/Dt$, where **E** is the infinitesimal strain tensor.

(b) Show that if T_{ij} is given by $T_{ij} = C_{ijkl}E_{kl}$ [Eq. (5.2.2b)], then the rate of work done P_s by the stress components in a body is given by

$$P_s = \frac{DU}{Dt} \tag{5.2.9}$$

where U is the strain energy function defined by Eq. (5.2.7).

Solution. (a) From $2E_{ij} = \dfrac{\partial u_i}{\partial X_j} + \dfrac{\partial u_j}{\partial X_i}$, we have,

$$2\frac{DE_{ij}}{Dt} = \frac{\partial}{\partial X_j}\frac{D\,u_i}{Dt} + \frac{\partial}{\partial X_i}\frac{D\,u_j}{Dt} = \frac{\partial v_i}{\partial X_j} + \frac{\partial v_j}{\partial X_i} \tag{i}$$

Since $x_i = x_i(X_1, X_2, X_3, t)$, we can obtain

$$\frac{\partial v_i}{\partial X_j} + \frac{\partial v_j}{\partial X_i} = \frac{\partial v_i}{\partial x_m}\frac{\partial x_m}{\partial X_j} + \frac{\partial v_j}{\partial x_m}\frac{\partial x_m}{\partial X_i} \tag{ii}$$

Now, from $x_m = X_m + u_m$, where u_m are the displacement components, we have

† By positive definite is meant that the function is zero if and only if all the strain components are zero, otherwise, it is always positive.

$$\frac{\partial x_m}{\partial X_i} = \delta_{mi} + \frac{\partial u_m}{\partial X_i} \text{ and } \frac{\partial x_m}{\partial X_j} = \delta_{mj} + \frac{\partial u_m}{\partial X_j} \tag{iii}$$

where $\frac{\partial u_m}{\partial X_i}$ are infinitesimal. Thus,

$$\frac{\partial v_i}{\partial X_j} + \frac{\partial v_j}{\partial X_i} \approx \frac{\partial v_i}{\partial x_j} + \frac{\partial v_j}{\partial x_i} = 2\,D_{ij} \tag{iv}$$

That is,

$$\frac{D\,E_{ij}}{Dt} \approx D_{ij} \tag{v}$$

(b) In Section 4.12, we derived the formula for computing the rate of work done by the stress components (the stress power) as

$$P_s = T_{ij}D_{ij} \tag{vi}$$

Using Eq. (v), we have

$$P_s = T_{ij}\frac{DE_{ij}}{Dt} \tag{vii}$$

Now if $T_{ij} = \frac{\partial U}{\partial E_{ij}}$[Eq. (5.2.7)], then,

$$P_s = \frac{\partial U}{\partial E_{ij}}\frac{DE_{ij}}{Dt} = \frac{\partial U}{\partial E_{ij}}\left(\frac{\partial E_{ij}}{\partial t}\right)_{X_i-\text{fixed}} = \left(\frac{\partial U}{\partial t}\right)_{X_i-\text{fixed}} = \frac{DU}{Dt} \tag{viii}$$

That is , with the assumption given by Eq. (5.2.7), the rate at which the strain energy increases is completely determined by the rate at which the stress components are doing work and if P_s is zero then the strain energy remains a constant (i.e., stored). This result provides the motivation for assuming the existence of a positive definite energy function through Eq. (5.2.7) in association with the concept of "elasticity"†.

Example 5.2.2

Show that if $T_{ij} = \frac{\partial U}{\partial E_{ij}}$ for a linearly elastic solid, then

† We are dealing here with a purely mechanical theory where temperature and entropy play no part in the model. However, within the frame work of thermoelastic model, it can be proved that a stored energy function exists if the deformation process is either isothermal or isentropic.

(a)

$$C_{ijkl} = C_{klij} \tag{5.2.10}$$

(b)the strain energy function U is given by

$$U = \frac{1}{2}T_{ij}E_{ij} = \frac{1}{2}C_{ijkl}E_{ij}E_{kl} \tag{5.2.11}$$

Solution. (a) Since for linearly elastic solid $T_{ij} = C_{ijkl}E_{kl}$, therefore

$$\frac{\partial T_{ij}}{\partial E_{rs}} = C_{ijrs} \tag{i}$$

Thus, from Eq. (5.2.7), i.e., $T_{ij} = \dfrac{\partial U}{\partial E_{ij}}$, we have

$$C_{ijrs} = \frac{\partial^2 U}{\partial E_{rs}\,\partial E_{ij}} \tag{ii}$$

Now, since $\dfrac{\partial^2 U}{\partial E_{rs}\,\partial E_{ij}} = \dfrac{\partial^2 U}{\partial E_{ij}\,\partial E_{rs}}$

therefore,

$$C_{ijrs} = C_{rsij} \text{ or } C_{ijkl} = C_{klij} \tag{5.2.12}$$

(b) From

$$T_{ij} = \frac{\partial U}{\partial E_{ij}} \tag{iii}$$

we have

$$T_{ij}dE_{ij} = \frac{\partial U}{\partial E_{ij}}\,dE_{ij} = dU \tag{iv}$$

i.e.,

$$dU = C_{ijkl}E_{kl}dE_{ij} \tag{v}$$

Changing the dummy indices, we obtain

$$dU = C_{klij}E_{ij}dE_{kl} \tag{vi}$$

But, $C_{klij} = C_{ijkl}$, therefore

$$dU = C_{ijkl}E_{ij}dE_{kl} \tag{vii}$$

Adding Eqs. (v) and (vii), we obtain

$$2dU = C_{ijkl}(E_{kl}\, dE_{ij} + E_{ij}\, dE_{kl}) = C_{ijkl}\, d\,(E_{ij}\, E_{kl}) \tag{viii}$$

from which,

$$U = \frac{1}{2} C_{ijkl}\, E_{ij}\, E_{kl}$$

In the following, we first show that if the material is isotropic, then the number of independent coefficients reduces to only 2. Later, in Part B, the constitutive equations for anisotropic elastic solid involving 13 coefficients (monoclinic elastic solid) , 9 coefficients (orthotropic elastic solid) and 5 coefficients (transversely isotropic solid), will be discussed.

PART A Linear Isotropic Elastic Solid

5.3 Linear Isotropic Elastic Solid

A material is said to be **isotropic** if its mechanical properties can be described without reference to direction. When this is not true, the material is said to be anisotropic. Many structural metals such as steel and aluminum can be regarded as isotropic without appreciable error.

We had, for a linear elastic solid, with respect to the $\mathbf{e}_i$ basis,

$$T_{ij} = C_{ijkl}E_{kl} \tag{i}$$

and with respect to the $\mathbf{e}_i'$ basis,

$$T_{ij}' = C_{ijkl}'E_{kl}' \tag{ii}$$

If the material is isotropic, then the components of the elasticity tensor must remain the same regardless of how the rectangular basis are rotated and reflected. That is

$$C_{ijkl}' = C_{ijkl} \tag{5.3.1}$$

under all orthogonal transformation of basis. A tensor having the same components with respect to every orthonormal basis is known as an **isotropic tensor**. For example, the identity tensor $\mathbf{I}$ is obviously an isotropic tensor since its components δ_{ij} are the same for any Cartesian basis. Indeed, it can be proved (see Prob. 5.1) that except for a scalar multiple, the identity tensor is the only isotropic second tensor. From δ_{ij}, we can form the following three independent isotropic fourth-order tensors

$$A_{ijkl} \equiv \delta_{ij}\, \delta_{kl} \tag{5.3.2}$$

$$B_{ijkl} \equiv \delta_{ik}\, \delta_{jl} \tag{5.3.3}$$

$$H_{ijkl} \equiv \delta_{il}\, \delta_{jk} \tag{5.3.4}$$

It can be shown that any isotropic fourth order tensor can be represented as a linear combination of the above three isotropic fourth order tensors (we omit the rather lengthy proof here. In part B of this chapter, we shall give the detail reductions of the general C_{ijkl} to the isotropic case). Thus, for an isotropic linearly elastic material, the elasticity tensor C_{ijkl} can be written as a linear combination of A_{ijkl}, B_{ijkl}, and H_{ijkl}.

$$C_{ijkl} = \lambda A_{ijkl} + \alpha B_{ijkl} + \beta H_{ijkl} \tag{5.3.5}$$

where λ, α, and β are constants. Substituting Eq. (5.3.5) into Eq. (i) and since

$$A_{ijkl} E_{kl} = \delta_{ij} \delta_{kl} E_{kl} = \delta_{ij} E_{kk} = \delta_{ij} e \tag{iii}$$

$$B_{ijkl} E_{kl} = \delta_{ik} \delta_{jl} E_{kl} = E_{ij} \tag{iv}$$

$$H_{ijkl} E_{kl} = \delta_{il} \delta_{jk} E_{kl} = E_{ji} = E_{ij} \tag{v}$$

we have

$$T_{ij} = C_{ijkl} E_{kl} = \lambda e \delta_{ij} + (\alpha + \beta) E_{ij} \tag{vi}$$

Or, denoting $\alpha + \beta$ by 2μ, we have

$$T_{ij} = \lambda e \delta_{ij} + 2\mu E_{ij} \tag{5.3.6a}$$

or, in direct notation

$$\mathbf{T} = \lambda e \mathbf{I} + 2\mu \mathbf{E} \tag{5.3.6b}$$

where $e = E_{kk}$ = first scalar invariant of $\mathbf{E}$. In long form, Eqs. (5.3.6) are given by

$$T_{11} = \lambda (E_{11} + E_{22} + E_{33}) + 2\mu E_{11} \tag{5.3.6c}$$

$$T_{22} = \lambda (E_{11} + E_{22} + E_{33}) + 2\mu E_{22} \tag{5.3.6d}$$

$$T_{33} = \lambda (E_{11} + E_{22} + E_{33}) + 2\mu E_{33} \tag{5.3.6e}$$

$$T_{12} = 2\mu E_{12} \tag{5.3.6f}$$

$$T_{13} = 2\mu E_{13} \tag{5.3.6g}$$

$$T_{23} = 2\mu E_{23} \tag{5.3.6h}$$

Equations (5.36) are the constitutive equations for a linear isotropic elastic solid. The two material constants λ and μ are known as **Lame's coefficients**, or, **Lame's constants**. Since E_{ij} are dimensionless, λ and μ are of the same dimension as the stress tensor, force per unit area. For a given real material, the values of the Lame's constants are to be determined from suitable experiments. We shall have more to say about this later.

Example 5.3.1

Find the components of stress at a point if the strain matrix is

$$[\mathbf{E}] = \begin{bmatrix} 30 & 50 & 20 \\ 50 & 40 & 0 \\ 20 & 0 & 30 \end{bmatrix} \times 10^{-6}$$

and the material is steel with $\lambda = 119.2$ GPa (17.3×10^6 psi) and $\mu = 79.2$ GPa (11.5×10^6 psi).

Solution. We use Hooke's law $T_{ij} = \lambda e \delta_{ij} + 2\mu E_{ij}$, by first evaluating the dilatation $e = 100 \times 10^{-6}$. The stress components can now be obtained

$$T_{11} = \lambda e + 2\mu E_{11} = 1.67 \times 10^{-2} \text{ GPa}$$

$$T_{22} = \lambda e + 2\mu E_{22} = 1.83 \times 10^{-2} \text{ GPa}$$

$$T_{33} = \lambda e + 2\mu E_{33} = 1.67 \times 10^{-2} \text{ GPa}$$

$$T_{12} = T_{21} = 2\mu E_{12} = 7.92 \times 10^{-2} \text{ GPa}$$

$$T_{13} = T_{31} = 2\mu E_{13} = 3.17 \times 10^{-3} \text{ GPa}$$

$$T_{23} = T_{32} = 0 \text{ GPa}$$

Example 5.3.2

(a) For an isotropic Hookean material, show that the principal directions of stress and strain coincide.

(b) Find a relation between the principal values of stress and strain

Solution. (a) Let $\mathbf{n}_1$ be an eigenvector of the strain tensor $\mathbf{E}$ (i.e., $\mathbf{E}\mathbf{n}_1 = E_1 \mathbf{n}_1$). Then, by Hooke's law we have

$$\mathbf{T}\mathbf{n}_1 = 2\mu \mathbf{E}\mathbf{n}_1 + \lambda e \mathbf{I}\mathbf{n}_1 = (2\mu E_1 + \lambda e)\mathbf{n}_1$$

Therefore, $\mathbf{n}_1$ is also an eigenvector of the tensor $\mathbf{T}$.

(b) Let E_1, E_2, E_3 be the eigenvalues of $\mathbf{E}$ then $e = E_1 + E_2 + E_3$, and from Eq. (5.3.6b),

$$T_1 = 2\mu E_1 + \lambda (E_1 + E_2 + E_3).$$

In a similar fashion,

$$T_2 = 2\mu E_2 + \lambda (E_1 + E_2 + E_3).$$

$$T_3 = 2\mu E_3 + \lambda (E_1 + E_2 + E_3).$$

Example 5.3.3

For an isotropic material

(a) Find a relation between the first invariants of stress and strain.

(b) Use the result of part (a) to invert Hooke's law so that strain is a function of stress

Solution. (a) By adding Eqs. (5.3.6c,d,e), we have

$$T_{kk} = (2\mu + 3\lambda)E_{kk} = (2\mu + 3\lambda)e \tag{5.3.7}$$

(b) We now invert Eq. (5.3.6b) as

$$\mathbf{E} = \frac{1}{2\mu}\mathbf{T} - \frac{\lambda}{2\mu}e\,\mathbf{I} = \frac{1}{2\mu}\mathbf{T} - \frac{\lambda\, T_{kk}}{2\mu\,(2\mu + 3\lambda)}\mathbf{I} \tag{5.3.8}$$

5.4 Young's Modulus, Poisson's Ratio, Shear Modulus, and Bulk Modulus

Equations (5.3.6) express the stress components in terms of the strain components. These equations can be inverted, as was done in Example 5.3.3, to give

$$E_{ij} = \frac{1}{2\mu}\left[T_{ij} - \frac{\lambda}{3\lambda + 2\mu}T_{kk}\,\delta_{ij}\right] \tag{5.4.1}$$

We also have, from Eq. (5.3.7)

$$e = \left(\frac{1}{2\mu + 3\lambda}\right)T_{kk} \tag{5.4.2}$$

If the state of stress is such that only one normal stress component is not zero, we call it a **uniaxial stress** state. The uniaxial stress state is a good approximation to the actual state of stress in the cylindrical bar used in the tensile test described in Section 5.1. If we take the $\mathbf{e}_1$ direction to be axial with $T_{11} \neq 0$ and all other $T_{ij} = 0$, then Eqs. (5.4.1) give

$$E_{11} = \frac{1}{2\mu}\left[T_{11} - \frac{\lambda}{3\lambda + 2\mu}T_{11}\right] = \frac{\lambda + \mu}{\mu\,(3\lambda + 2\mu)}T_{11} \tag{5.4.3}$$

$$E_{33} = E_{22} = -\frac{\lambda}{2\mu\,(3\lambda + 2\mu)}T_{11} = -\frac{\lambda}{2\,(\lambda + \mu)}E_{11} \tag{5.4.4}$$

$$E_{12} = E_{13} = E_{23} = 0 \tag{5.4.5}$$

The ratio T_{11}/E_{11}, corresponding to the ratio σ/ε_a of the tensile test described in Section 5.1, is the **Young's modulus** or the **modulus of elasticity** E_Y. Thus, from Eq. (5.4.3),

$$E_Y = \frac{\mu\,(3\lambda + 2\mu)}{\lambda + \mu} \tag{5.4.6}$$

The ratio $-E_{22}/E_{11}$ and $-E_{33}/E_{11}$, corresponding to the ratio $-\varepsilon_d/\varepsilon_a$ of the same tensile test, is the **Poisson's ratio**. Thus, from Eq. (5.4.4)

$$\nu = \frac{\lambda}{2(\lambda + \mu)} \tag{5.4.7}$$

Using Eqs. (5.4.6) and (5.4.7) we write Eq. (5.4.1) in the frequently used engineering form

$$E_{11} = \frac{1}{E_Y}[T_{11} - \nu\,(T_{22} + T_{33})] \tag{5.4.8a}$$

$$E_{22} = \frac{1}{E_Y}[T_{22} - \nu\,(T_{33} + T_{11})] \tag{5.4.8b}$$

$$E_{33} = \frac{1}{E_Y}[T_{33} - \nu\,(T_{11} + T_{22})] \tag{5.4.8c}$$

$$E_{12} = \frac{1}{2\mu}T_{12} \tag{5.4.8d}$$

$$E_{13} = \frac{1}{2\mu}T_{13} \tag{5.4.8e}$$

$$E_{23} = \frac{1}{2\mu}T_{23} \tag{5.4.8f}$$

Even though there are three material constants in Eq. (5.4.8), it is important to remember that only two of them are independent for the isotropic material. In fact, by eliminating λ from Eqs. (5.4.6) and (5.4.7), we have the important relation

$$\mu = \frac{E_Y}{2\,(1 + \nu)}. \tag{5.4.9}$$

Using this relation, we can also write Eq. (5.4.1) as

$$E_{ij} = \frac{1}{E_Y}[(1 + \nu)T_{ij} - \nu\,(T_{kk})\delta_{ij}] \tag{5.4.10}$$

If the state of stress is such that only one pair of shear stresses is not zero, it is called a **simple shear stress** state. This state of stress may be described by $T_{12} = T_{21} = \tau$ and Eq. (5.4.8d) gives

$$E_{12} = E_{21} = \frac{\tau}{2\mu} \tag{5.4.11}$$

Defining the **shear modulus** G, as the ratio of the shearing stress τ in simple shear to the small decrease in angle between elements that are initially in the $\mathbf{e}_1$ and $\mathbf{e}_2$ directions, we have

$$\frac{\tau}{2E_{12}} \equiv G \tag{5.4.12}$$

Comparing Eq. (5.4.12) with (5.4.11), we see that the Lame's constant μ is also the **shear modulus** G.

A third stress state, called the **hydrostatic stress**, is defined by the stress tensor $\mathbf{T} = \sigma\mathbf{I}$. In this case, Eq. (5.3.7) gives

$$e = \frac{3\sigma}{2\mu + 3\lambda} \tag{5.4.13}$$

As mentioned in Section 5.1, the bulk modulus k, is defined as the ratio of the hydrostatic normal stress σ, to the unit volume change, we have

$$k = \frac{\sigma}{e} = \frac{2\mu + 3\lambda}{3} = \lambda + \frac{2}{3}\mu \tag{5.4.14}$$

From, Eqs. (5.4.6),(5.4.7), (5.4.9) and (5.4.14) we see that the Lame's constants, the Young's modulus, the shear modulus, the Poisson's ratio and the bulk modulus are all interrelated. Only two of them are independent for a linear, elastic isotropic material. Table 5.1 expresses the various elastic constants in terms of two basic pairs. Table 5.2 gives some numerical values for some common materials.

Table 5.1 Conversion of constants for an isotropic elastic material

	λ, μ	E_Y, ν	μ, ν	E_Y, μ	k, ν
λ	λ	$\frac{\nu E_Y}{(1+\nu)(1-2\nu)}$	$\frac{2\mu\nu}{1-2\nu}$	$\frac{\mu(E_Y-2\mu)}{3\mu-E_Y}$	$\frac{3k\nu}{1+\nu}$
μ	μ	$\frac{E_Y}{2(1+\nu)}$	μ	μ	$\frac{3k(1-2\nu)}{2(1+\nu)}$
k	$\lambda+\frac{2}{3}\mu$	$\frac{E_Y}{3(1-2\nu)}$	$\frac{2\mu(1+\nu)}{3(1-2\nu)}$	$\frac{\mu E_Y}{3(3\mu-E_Y)}$	k
E_Y	$\frac{\mu(3\lambda+2\mu)}{\lambda+\mu}$	E_Y	$2\mu(1+\nu)$	E_Y	$3k(1-2\nu)$
ν	$\frac{\lambda}{2(\lambda+\mu)}$	ν	ν	$\frac{E_Y}{2\mu}-1$	ν

Table 5.2 Elastic constants for isotropic materials at room temperature‡.

Material	Composition	Modulus of Elasticity E_Y		Poisson's Ratio ν	Shear Modulus μ		Lamé Constant λ		Bulk Modulus k	
		10^6 psi	GPa		10^6 psi	GPa	10^6 psi	GPa	10^6 psi	GPa
Aluminum	Pure and alloy	9.9-11.4	68.2-78.5	0.32-0.34	3.7-3.85	25.5-26.53	6.7-9.1	46.2-62.7	9.2-11.7	63.4-80.6
Brass	60-70% Cu,40-30% Zn	14.5-15.9	99.9-109.6	0.33-0.36	5.3-6.0	36.6-41.3	10.6-15.0	73.0-103.4	14.1-19.0	97.1-130.9
Copper		17-18	117-124	0.33-0.36	5.8-6.7	40.0-46.2	12.4-19.0	85.4-130.9	163.3-21.5	112.3-148.1
Iron,cast	2.7-3.6% C	13-21	90-145	0.21-0.30	5.2-8.2	35.8-56.5	3.9-12.1	26.9-83.4	7.4-17.6	51.0-121.3
Steel	Carbon and low alloy	5.4-16.6	106.1-114.4	0.34	6.0	41.3	12.2-13.2	84.1-90.9	16.2-17.2	111.6-118.5
Stainless steel	18% Cr, 8% Ni	28-30	193-207	0.30	10.6	73.0	16.2-17.3	111.6-119.2	23.2-24.4	160.5-168.1
Titanium	Pure and alloy	15.4-16.6	106.1-114.4	0.34	6.0	41.3	12.2-13.2	84.1-90.9	16.2-17.2	111.6-118.5
Glass	Various	7.2-11.5	49.6-79.2	0.21-0.27	3.8-4.7	26.2-32.4	2.2-5.3	15.2-36.5	4.7-8.4	32.4-57.9
Methyl methacrylate		0.35-0.5	2.41-3.45	--	--	--	--	--	--	--
Polyenthylene		0.02-0.055	0.14-0.38	--	--	--	--	--	--	--
Rubber		0.00011-0.00060	0.00076-0.00413	0.50	0.00004-0.00020	0.00028-0.00138	$\infty^\dagger$	$\infty^\dagger$	$\infty^\dagger$	$\infty^\dagger$

† As ν approaches 0.5 the ratio of k/E_Y and $\lambda/\mu \rightarrow \infty$. The actual value of k and λ for some rubbers may be close to the values of steel.

‡ Partly from "an Introduction to the Mechanics of Solids," S.H. Crandall and N.C. Dahl, (Eds.), Mcgraw-Hill, 1959. (Used with permission of McGraw-Hill Book Company.)

Example 5.4.1

(a) If for a specific material the ratio of the bulk modulus to Young's modulus is very large, find the approximate value of Poisson's ratio.

(b) Indicate why the material of part(a) can be called incompressible.

Solution. (a) In terms of Lame's constants, we have

$$\frac{k}{E_Y} = \frac{1}{3}\left(\frac{\lambda}{\mu} + 1\right) \tag{5.4.15}$$

$$\frac{\lambda}{\mu} = \frac{2\nu}{1 - 2\nu} \tag{5.4.16}$$

Combining these two equation gives

$$\frac{k}{E_Y} = \frac{1}{3(1 - 2\nu)} \tag{5.4.17}$$

Therefore, if $\frac{k}{E_Y} \to \infty$, then Poisson's ratio $\nu \to \frac{1}{2}$.

(b) For an arbitrary stress state, the dilatation or unit volume change is given by

$$e = \frac{T_{ii}}{3k} = \left(\frac{1 - 2\nu}{E_Y}\right) T_{ii} \tag{5.4.18}$$

If $\nu \to \frac{1}{2}$, then $e \to 0$. That is, the material is incompressible. It has never been observed in real material that hydrostatic compression results in an increase of volume, therefore, the upper limit of Poisson's ratio is $\nu = \frac{1}{2}$.

5.5 Equations of the Infinitesimal Theory of Elasticity

In section 4.7, we derived the Cauchy's equation of motion, to be satisfied by any continuum, in the following form

$$\rho\, a_i = \rho\, B_i + \frac{\partial T_{ij}}{\partial x_j} \tag{5.5.1}$$

where ρ is the density, a_i the acceleration component, $\rho\, B_i$ the component of body force per unit volume and T_{ij} the Cauchy stress components. All terms in the equation are quantities associated with a particle which is currently at the position (x_1, x_2, x_3).

We shall consider only the case of small motions, that is, motions such that every particle is always in a small neighborhood of the natural state. † More specifically, if X_i denotes the position in the natural state of a typical particle, we assume that

$$x_i \approx X_i$$

and that the magnitude of the components of the displacement gradient $\partial u_i/\partial X_j$, is also very small.

Since

$$x_1 = X_1 + u_1, \quad x_2 = X_2 + u_2, \quad x_3 = X_3 + u_3 \tag{5.5.2}$$

therefore, the velocity component

$$v_1 = \frac{Dx_1}{Dt} = \left(\frac{\partial u_1}{\partial t}\right)_{x_i-\text{fixed}} + v_1\frac{\partial u_1}{\partial x_1} + v_2\frac{\partial u_1}{\partial x_2} + v_3\frac{\partial u_1}{\partial x_3} \tag{5.5.3}$$

where v_i are the small velocity components associated with the small displacement components. Neglecting the small quantities of higher order, we obtain the velocity component

$$v_1 \approx \left(\frac{\partial u_1}{\partial t}\right)_{x_i-\text{fixed}} \tag{i}$$

and the acceleration component

$$a_1 \approx \left(\frac{\partial^2 u_1}{\partial t^2}\right)_{x_i-\text{fixed}} \tag{ii}$$

Similar approximations are obtained for the other acceleration components. Thus,

$$a_i \approx \left(\frac{\partial^2 u_i}{\partial t^2}\right)_{x_i-\text{fixed}} \tag{5.5.4}$$

Furthermore, since the differential volume dV is related to the initial volume dV_o by the equation [See Sect. 3.10]

$$dV = (1 + E_{kk})dV_o \tag{iii}$$

therefore, the densities are related by

$$\rho = (1 + E_{kk})^{-1}\rho_o \approx (1 - E_{kk})\rho_o \tag{5.5.5}$$

† We assume the existence of a state, called natural state, in which the body is unstressed

Again, neglecting small quantities of higher order, we have

$$\rho a_i \approx \rho_o \left(\frac{\partial^2 u_i}{\partial t^2} \right)_{x_i - \text{fixed}} \tag{5.5.6}$$

Thus, one can replace the equations of motion

$$\rho \frac{D^2 u_i}{Dt^2} = \rho B_i + \frac{\partial T_{ij}}{\partial x_j} \tag{iv}$$

with

$$\rho_o \frac{\partial^2 u_i}{\partial t^2} = \rho_o B_i + \frac{\partial T_{ij}}{\partial x_j} \tag{5.5.7}$$

In Eq. (5.5.7) all displacement components are regarded as functions of the spatial coordinates and the equations simply state that for infinitesimal motions, there is no need to make the distinction between the spatial coordinates x_i and the material coordinates X_i. In the following sections in part A and B of this chapter, all displacement components will be expressed as functions of the spatial coordinates.

A displacement field u_i is said to describe a possible motion in an elastic medium with small deformation if it satisfies Eq. (5.5.7). When a displacement field $u_i = u_i\,(x_1, x_2, x_3, t\,)$ is given, to make sure that it is a possible motion, we can first compute the strain field E_{ij} from Eq. (3.7.10), i.e.,

$$E_{ij} = \frac{1}{2}\left(\frac{\partial u_i}{\partial x_j} + \frac{\partial u_j}{\partial x_i} \right) \tag{5.5.8}$$

and then the corresponding elastic stress field T_{ij} from Eq. (5.3.6a), i.e.,

$$T_{ij} = \lambda\, e\, \delta_{ij} + 2\mu\, E_{ij} \tag{5.5.9}$$

The substitution of u_i and T_{ij} in Eq. (5.5.7) will then verify whether or not the given motion is possible. If the motion is found to be possible, the surface tractions, on the boundary of the body, needed to maintain the motion are given by Eq. (4.9.1), i.e.,

$$t_i = T_{ij}\, n_j \tag{5.5.10}$$

On the other hand, if the boundary conditions are prescribed (e.g., certain boundaries of the body must remain fixed at all times and other boundaries must remain traction-free at all times, etc.) then, in order that u_i be the solution to the problem, it must meet the prescribed conditions on the boundary.

Example 5.5.1

Combine Eqs. (5.5.7),(5.5.8) and (5.5.9) to obtain the Navier's equations of motion in terms of the displacement components only.

Solution. From

$$T_{ij} = \lambda\, e\, \delta_{ij} + 2\mu\, E_{ij} = \lambda\, e\, \delta_{ij} + \mu \left(\frac{\partial u_i}{\partial x_j} + \frac{\partial u_j}{\partial x_i} \right) \tag{i}$$

we have

$$\frac{\partial T_{ij}}{\partial x_j} = \lambda \frac{\partial e}{\partial x_j} \delta_{ij} + \mu \left(\frac{\partial^2 u_i}{\partial x_j \partial x_j} + \frac{\partial^2 u_j}{\partial x_j\, \partial x_i} \right) \tag{ii}$$

Now,

$$\frac{\partial e}{\partial x_j} \delta_{ij} = \frac{\partial e}{\partial x_i} \tag{iii}$$

$$\frac{\partial^2 u_j}{\partial x_j\, \partial x_i} = \frac{\partial}{\partial x_i} \left(\frac{\partial u_j}{\partial x_j} \right) = \frac{\partial e}{\partial x_i} \tag{iv}$$

Therefore, the equation of motion, Eq. (5.5.7), becomes

$$\rho_o \frac{\partial^2 u_i}{\partial t^2} = \rho_o B_i + (\lambda + \mu) \frac{\partial e}{\partial x_i} + \mu \frac{\partial^2 u_i}{\partial x_j\, \partial x_j} \tag{5.5.11}$$

In long form, Eqs. (5.5.11) read

$$\rho_o \frac{\partial^2 u_1}{\partial t^2} = \rho_o B_1 + (\lambda + \mu) \frac{\partial e}{\partial x_1} + \mu \left(\frac{\partial^2}{\partial x_1^2} + \frac{\partial^2}{\partial x_2^2} + \frac{\partial^2}{\partial x_3^2} \right) u_1 \tag{5.5.11a}$$

$$\rho_o \frac{\partial^2 u_2}{\partial t^2} = \rho_o B_2 + (\lambda + \mu) \frac{\partial e}{\partial x_2} + \mu \left(\frac{\partial^2}{\partial x_1^2} + \frac{\partial^2}{\partial x_2^2} + \frac{\partial^2}{\partial x_3^2} \right) u_2 \tag{5.5.11b}$$

$$\rho_o \frac{\partial^2 u_3}{\partial t^2} = \rho_o B_3 + (\lambda + \mu) \frac{\partial e}{\partial x_3} + \mu \left(\frac{\partial^2}{\partial x_1^2} + \frac{\partial^2}{\partial x_2^2} + \frac{\partial^2}{\partial x_3^2} \right) u_3 \tag{5.5.11c}$$

where

$$e = \frac{\partial u_i}{\partial x_i} = \frac{\partial u_1}{\partial x_1} + \frac{\partial u_2}{\partial x_2} + \frac{\partial u_3}{\partial x_3} \tag{5.5.12}$$

In invariant form, the Navier equations of motion take the form

$$\rho_o \frac{\partial^2 \mathbf{u}}{\partial t^2} = \rho_o \mathbf{B} + (\lambda + \mu)\nabla e + \mu \text{ div } \nabla \mathbf{u} \tag{5.5.13}$$

$$e = \text{div}\mathbf{u} \tag{5.5.14}$$

5.6 Navier Equations in Cylindrical and Spherical Coordinates

In cylindrical coordinates, with u_r, u_θ, u_z denoting the displacement in (r,θ,z) direction, Hooke's law takes the form of [See Sect. 2D2 for components of $\nabla f, \nabla \mathbf{u}$ and div$\mathbf{u}$ in cylindrical coordinates]

$$T_{rr} = \lambda e + 2\mu \frac{\partial u_r}{\partial r} \tag{5.6.1a}$$

$$T_{\theta\theta} = \lambda e + 2\mu \left(\frac{1}{r}\frac{\partial u_\theta}{\partial \theta} + \frac{u_r}{r} \right) \tag{5.6.1b}$$

$$T_{zz} = \lambda e + 2\mu \frac{\partial u_z}{\partial z} \tag{5.6.1c}$$

$$T_{r\theta} = \mu \left(\frac{1}{r}\frac{\partial u_r}{\partial \theta} + \frac{\partial u_\theta}{\partial r} - \frac{u_\theta}{r} \right) = T_{\theta r} \tag{5.6.1d}$$

$$T_{\theta z} = \mu \left(\frac{\partial u_\theta}{\partial z} + \frac{1}{r}\frac{\partial u_z}{\partial \theta} \right) = T_{z\theta} \tag{5.6.1e}$$

$$T_{zr} = \mu \left(\frac{\partial u_r}{\partial z} + \frac{\partial u_z}{\partial r} \right) = T_{rz} \tag{5.6.1f}$$

where

$$e = \frac{\partial u}{\partial r} + \frac{u_r}{r} + \frac{1}{r}\left(\frac{\partial u_\theta}{\partial \theta} \right) + \frac{\partial u_z}{\partial z} \tag{5.6.1g}$$

and the Navier's equations of motion are:

$$\rho_o \frac{\partial^2 u_r}{\partial t^2} = \rho_o B_r + (\lambda + \mu)\frac{\partial e}{\partial r} + \mu \left[\frac{\partial^2 u_r}{\partial r^2} + \frac{1}{r^2}\frac{\partial^2 u_r}{\partial \theta^2} + \frac{\partial^2 u_r}{\partial z^2} + \frac{1}{r}\frac{\partial u_r}{\partial r} - \frac{2}{r^2}\frac{\partial u_\theta}{\partial \theta} - \frac{u_r}{r^2} \right] \tag{5.6.2a}$$

$$\rho_o \frac{\partial^2 u_\theta}{\partial t^2} = \rho_o B_\theta + \frac{(\lambda+\mu)}{r}\frac{\partial e}{\partial \theta} + \mu \left[\frac{\partial^2 u_\theta}{\partial r^2} + \frac{1}{r^2}\frac{\partial^2 u_\theta}{\partial \theta^2} + \frac{\partial^2 u_\theta}{\partial z^2} + \frac{1}{r}\frac{\partial u_\theta}{\partial r} + \frac{2}{r^2}\frac{\partial u_r}{\partial \theta} - \frac{u_\theta}{r^2} \right] \quad (5.6.2b)$$

$$\rho_0 \frac{\partial^2 u_z}{\partial t^2} = \rho_0 B_z + (\lambda+\mu)\frac{\partial e}{\partial z} + \mu \left[\frac{\partial^2 u_z}{\partial r^2} + \frac{1}{r^2}\frac{\partial^2 u_z}{\partial \theta^2} + \frac{\partial^2 u_z}{\partial z^2} + \frac{1}{r}\frac{\partial u_z}{\partial r} \right] \quad (5.6.2c)$$

In spherical coordinates, with u_r, u_θ, u_ϕ denoting the displacement components in (r, θ, ϕ) direction, Hooke's law take the form of [See Sect. 2D3 for components of ∇f, $\nabla \mathbf{u}$ and div$\mathbf{u}$ in spherical coordinates]

$$T_{rr} = \lambda e + 2\mu \frac{\partial u_r}{\partial r} \quad (5.6.3a)$$

$$T_{\theta\theta} = \lambda e + 2\mu \left(\frac{1}{r}\frac{\partial u_\theta}{\partial \theta} + \frac{u_r}{r} \right) \quad (5.6.3b)$$

$$T_{\phi\phi} = \lambda e + 2\mu \left(\frac{1}{r\sin\theta}\frac{\partial u_\phi}{\partial \phi} + \frac{u_r}{r} + \frac{u_\theta \cot\theta}{r} \right) \quad (5.6.3c)$$

$$T_{r\theta} = \mu \left(\frac{1}{r}\frac{\partial u_r}{\partial \theta} + \frac{\partial u_\theta}{\partial r} - \frac{u_\theta}{r} \right) \quad (5.6.3d)$$

$$T_{\theta\phi} = \mu \left(\frac{1}{r\sin\theta}\frac{\partial u_\theta}{\partial \phi} - \frac{u_\phi \cot\theta}{r} + \frac{1}{r}\frac{\partial u_\phi}{\partial \theta} \right) \quad (5.6.3e)$$

$$T_{\phi r} = \mu \left(\frac{1}{r\sin\theta}\frac{\partial u_r}{\partial \phi} + \frac{\partial u_\phi}{\partial r} - \frac{u_\phi}{r} \right) \quad (5.6.3f)$$

where

$$e = \frac{\partial u}{\partial r} + \frac{2u_r}{r} + \frac{1}{r}\left(\frac{\partial u_\theta}{\partial \theta} \right) + \frac{1}{r\sin\theta}\frac{\partial u_\phi}{\partial \phi} + \frac{u_\theta \cot\theta}{r} \quad (5.6.3g)$$

and the Navier's equations of motion are

$$\rho_o \frac{\partial^2 u_r}{\partial t^2} = \rho_o B_r + (\lambda+\mu)\frac{\partial e}{\partial r} + \mu \left[\frac{\partial}{\partial r}\left(\frac{1}{r^2}\frac{\partial}{\partial r}(r^2 u_r) \right) \right.$$
$$\left. + \frac{1}{r^2 \sin\theta}\frac{\partial}{\partial \theta}(\sin\theta \frac{\partial u_r}{\partial \theta}) + \frac{1}{r^2 \sin^2\theta}\frac{\partial^2 u_r}{\partial \phi^2} - \frac{2}{r^2 \sin\theta}\frac{\partial}{\partial \theta}(u_\theta \sin\theta) - \frac{2}{r^2 \sin\theta}\frac{\partial u_\phi}{\partial \phi} \right] \quad (5.6.4a)$$

$$\rho_o \frac{\partial^2 u_\theta}{\partial t^2} = \rho_o B_\theta + \frac{\lambda+\mu}{r}\frac{\partial e}{\partial \theta} + \mu \left[\frac{1}{r^2}\frac{\partial}{\partial r}\left(r^2 \frac{\partial u_\theta}{\partial r} \right) \right.$$

$$+\frac{1}{r^2}\frac{\partial}{\partial\theta}\left(\frac{1}{\sin\theta}\frac{\partial}{\partial\theta}(u_\theta\sin\theta)\right)+\frac{1}{r^2\sin^2\theta}\frac{\partial^2 u_\theta}{\partial\phi^2}+\frac{2}{r^2}\frac{\partial u_r}{\partial\theta}-\frac{2\cot\theta}{r^2\sin\theta}\frac{\partial u_\phi}{\partial\phi}] \tag{5.6.4b}$$

$$\rho_o\frac{\partial^2 v_\phi}{\partial t^2}=\rho_o B_\phi+\frac{\lambda+\mu}{r\sin\theta}\frac{\partial e}{\partial\phi}+\mu\left[\frac{1}{r^2}\frac{\partial}{\partial r}\left(r^2\frac{\partial u_\phi}{\partial r}\right)\right.$$

$$+\frac{1}{r^2}\frac{\partial}{\partial\theta}\left(\frac{1}{\sin\theta}\frac{\partial}{\partial\theta}(u_\phi\sin\theta)\right)+\frac{1}{r^2\sin^2\theta}\frac{\partial^2 u_\phi}{\partial\phi^2}+\frac{2}{r^2\sin\theta}\frac{\partial u_r}{\partial\phi}+\frac{2\cot\theta}{r^2\sin\theta}\frac{\partial u_\theta}{\partial\phi}] \tag{5.6.4c}$$

5.7 Principle of Superposition

Let $u_i^{(1)}$ and $u_i^{(2)}$ be two possible displacement fields corresponding to two body force fields $B_i^{(1)}$ and $B_i^{(2)}$. Let $T_{ij}^{(1)}$ and $T_{ij}^{(2)}$ be the corresponding stress fields. Then

$$\rho_o\frac{\partial^2 u_i^{(1)}}{\partial t^2}=\rho_o B_i^{(1)}+\frac{\partial T_{ij}^{(1)}}{\partial x_j} \tag{i}$$

and

$$\rho_o\frac{\partial^2 u_i^{(2)}}{\partial t^2}=\rho_o B_i^{(2)}+\frac{\partial T_{ij}^{(2)}}{\partial x_j} \tag{ii}$$

Adding the two equations, we get

$$\rho_o\frac{\partial^2}{\partial t^2}(u_i^{(1)}+u_i^{(2)})=\rho_o(B_i^{(1)}+B_i^{(2)})+\frac{\partial}{\partial x_j}(T_{ij}^{(1)}+T_{ij}^{(2)})$$

It is clear from the linearity of Eqs. (5.5.8) and (5.5.9) that $T_{ij}^{(1)}+T_{ij}^{(2)}$ is the stress field corresponding to the displacement field $u_i^{(1)}+u_i^{(2)}$. Thus, $u_i^{(1)}+u_i^{(2)}$ is also a possible motion under the body force field $(B_i^{(1)}+B_i^{(2)})$. The corresponding stress fields are given by $T_{ij}^{(1)}+T_{ij}^{(2)}$ and the surface tractions needed to maintain the total motion are given by $t_i^{(1)}+t_i^{(2)}$. This is the **principle of superposition.** One application of this principle is that in a given problem, we shall often assume that the body force is absent having in mind that its effect, if not negligible, can always be obtained separately and then superposed onto the solution of vanishing body force.

5.8 Plane Irrotational Wave

In this section, and in the following three sections, we shall present some simple but important elastodynamic problems using the model of linear isotropic elastic material.

Consider the motion

$$u_1 = \varepsilon \sin \frac{2\pi}{l}(x_1 - c_L t), \quad u_2 = 0, \quad u_3 = 0 \tag{5.8.1}$$

representing an infinite train of sinusoidal plane waves. In this motion, every particle executes simple harmonic oscillations of small amplitude ε around its natural state, the motion being always parallel to the $\mathbf{e}_1$ direction. All particles on a plane perpendicular to $\mathbf{e}_1$ are at the same phase of the harmonic motion at any one time [i.e., the same value of $(2\pi/l)(x_1 - c_L t)$]. A particle which at time t is at $x_1 + dx_1$ acquires at $t + dt$ the same phase of motion of the particle which is at x_1 at time t if $(x_1 + dx_1) - c_L(t + dt) = x_1 - c_L t$, i.e., $dx_1/dt = c_L$. Thus c_L is known as the **phase velocity** (the velocity with which the sinusoidal disturbance of wavelength l is moving in the $\mathbf{e}_1$ direction). Since the motions of the particles are parallel to the direction of the propagation of wave, it is a **longitudinal wave.**

We shall now consider if this wave is a possible motion in an elastic medium.

The strain components corresponding to the u_i given in Eq. (5.8.1) are

$$E_{11} = \varepsilon \left(\frac{2\pi}{l}\right) \cos \frac{2\pi}{l}(x_1 - c_L t) \tag{i}$$

$$E_{22} = E_{23} = E_{12} = E_{13} = E_{33} = 0 \tag{ii}$$

The stress components are (note $e = E_{11} + 0 + 0 = E_{11}$)

$$T_{11} = (\lambda + 2\mu)E_{11} = (\lambda + 2\mu)\frac{\partial u_1}{\partial x_1} \tag{iii}$$

$$T_{22} = T_{33} = \lambda E_{11} = \lambda \frac{\partial u_1}{\partial x_1} \tag{iv}$$

$$T_{12} = T_{13} = T_{23} = 0 \tag{v}$$

Substituting T_{ij} and u_i into the equations of motion in the absence of body forces, i.e.,

$$\rho_o \frac{\partial^2 u_i}{\partial t^2} = \frac{\partial T_{ij}}{\partial x_j} \tag{5.8.2}$$

we easily see that the second and third equations of motion are automatically satisfied $(0 = 0)$ and the first equation demands that

$$\rho_o \frac{\partial^2 u_1}{\partial t^2} = \frac{\partial T_{11}}{\partial x_1} = (\lambda + 2\mu)\frac{\partial^2 u_1}{\partial x_1^2} \tag{vi}$$

or

$$-\rho_o \varepsilon \left(\frac{2\pi}{l}\right)^2 c_L^2 \sin\frac{2\pi}{l}(x_1 - c_L t) = -(\lambda + 2\mu)\varepsilon\left(\frac{2\pi}{l}\right)^2 \sin\frac{2\pi}{l}(x_1 - c_L t) \tag{vii}$$

so that the phase velocity c_L is obtained to be

$$c_L = \left(\frac{\lambda + 2\mu}{\rho_o}\right)^{1/2} \tag{5.8.3}$$

Thus, we see that with c_L given by Eq. (5.8.3), the wave motion considered is a possible one. Since for this motion, the components of the rotation tensor

$$\frac{1}{2}\left(\frac{\partial u_i}{\partial x_j} - \frac{\partial u_j}{\partial x_i}\right) \tag{viii}$$

are zero at all times, it is known as a plane **irrotational wave.** As a particle oscillates, its volume also changes harmonically [the dilatation $e = E_{11} = \varepsilon(2\pi/l)\cos(2\pi/l)(x_1 - c_L t)$], the wave is thus also known as a **dilatational wave.**

From Eq. (5.8.3), we see that for the plane wave discussed, the phase velocity c_L depends only on the material properties and not on the wave length l. Thus any disturbance represented by the superposition of any number of one-dimensional plane irrotational wave trains of different wavelengths propagates, without changing the form of the disturbance (no longer sinusoidal), with the velocity equal to the phase velocity c_L. In fact, it can be easily seen [from Eq. (5.5.11)] that any irrotational disturbance given by

$$u_1 = u_1(x_1, t), \quad u_2 = u_3 = 0 \tag{5.8.4}$$

is a possible motion in the absence of body forces provided that $u_1(x_1, t)$ is a solution of the simple wave equation

$$\frac{\partial^2 u_1}{\partial t^2} = c_L^2 \frac{\partial^2 u_1}{\partial x_1^2} \tag{5.8.5}$$

It can be easily verified that $u_1 = f(s)$, where $s = x_1 \pm c_L t$ satisfies the above equation for any function f, so that disturbances of any form given by $f(s)$ propagate without changing its form with wave speed c_L. In other words, the phase velocity is also the rate of advance of a finite train of waves, or , of any arbitrary disturbance, into an undisturbed region.

Example 5.8.1

Consider a displacement field

$$u_1 = \alpha \sin\frac{2\pi}{l}(x_1 - c_L t) + \beta \cos\frac{2\pi}{l}(x_1 - c_L t) \quad u_2 = u_3 = 0 \tag{i}$$

for a material half-space that lies to the right of the plane $x_1 = 0$.

(a) Determine α, β, and l if the applied displacement on the plane $x_1 = 0$ is given by $\mathbf{u} = (b\sin\omega t)\mathbf{e}_1$

(b) Determine α, β, and l if the applied surface traction on $x_1 = 0$ is given by $\mathbf{t} = (d\sin\omega t)\mathbf{e}_1$.

Solution. The given displacement field is the superposition of two longitudinal elastic waves having the same velocity of propagation c_L in the positive x_1 direction and is therefore a possible elastic solution.

(a) To satisfy the displacement boundary condition, one simply sets

$$u_1(0,t) = b\sin\omega t \tag{ii}$$

or

$$-\alpha\sin\left(\frac{2\pi c_L t}{l}\right) + \beta\cos\left(\frac{2\pi c_L t}{l}\right) = b\sin\omega t \tag{iii}$$

Since this relation must be satisfied for all time t, we have

$$\beta = 0, \quad \alpha = -b, \quad l = \frac{2\pi c_L}{\omega} \tag{iv}$$

and the elastic wave has the form

$$u_1 = -b\sin\frac{\omega}{c_L}(x_1 - c_L t). \tag{v}$$

Note that the wavelength is inversely proportional to the forcing frequency ω. That is, the higher the forcing frequency the smaller the wavelength of the elastic wave.

(b) To satisfy the traction boundary condition on $x_1 = 0$, one requires that

$$\mathbf{t} = \mathbf{T}(-\mathbf{e}_1) = -(T_{11}\mathbf{e}_1 + T_{21}\mathbf{e}_2 + T_{31}\mathbf{e}_3) = (d\sin\omega t)\mathbf{e}_1 \tag{vi}$$

that is, at $x_1 = 0$, $T_{11} = -d\sin\omega t$, $T_{21} = T_{31} = 0$. For the assumed displacement field

$$T_{11} = (2\mu + \lambda)\frac{\partial u_1}{\partial x_1}, \quad T_{21} = T_{31} = 0, \tag{vii}$$

therefore,

$$-d\sin\omega t = (2\mu + \lambda)\left[\alpha\left(\frac{2\pi}{l}\right)\cos\frac{2\pi}{l}(x_1 - c_L t) - \beta\left(\frac{2\pi}{l}\right)\sin\frac{2\pi}{l}(x_1 - c_L t)\right]_{x_1 = 0} \tag{viii}$$

i.e.,

$$-d\sin\omega t = (2\mu + \lambda)\frac{2\pi}{l}\left[\alpha\cos\frac{2\pi}{l}c_L t + \beta\sin\frac{2\pi}{l}c_L t\right] \tag{ix}$$

To satisfy this relation for all time t, we have

$$\alpha = 0\,,\ \ \beta = \frac{-d}{2\mu + \lambda}\left(\frac{l}{2\pi}\right),\ \ \omega = \frac{2\pi c_L}{l} \tag{x}$$

or,

$$\alpha = 0\,,\ \ \beta = -\frac{d\,c_L}{(2\mu + \lambda)\,\omega},\ \ l = \frac{2\pi c_L}{\omega} \tag{xi}$$

and the resulting wave has the form,

$$u_1 = \frac{-d\,c_L}{(2\mu + \lambda)\omega}\cos\frac{\omega}{c_L}(x_1 - c_L\,t) \tag{xii}$$

We note, that not only the wavelength but the amplitude of the resulting wave is inversely proportional to the forcing frequency.

5.9 Plane Equivoluminal Wave

Consider the motion

$$u_1 = 0\,,\ \ u_2 = \varepsilon \sin\frac{2\pi}{l}(x_1 - c_L\,t),\ \ \ u_3 = 0 \tag{5.9.1}$$

This infinite train of plane harmonic wave differs from that discussed in Section 5.8 in that it is a transverse wave: the particle motion is parallel to $\mathbf{e}_2$ direction, whereas the disturbance is propagating in the $\mathbf{e}_1$ direction.

For this motion, the strain components are

$$E_{11} = E_{22} = E_{33} = E_{13} = E_{23} = 0 \tag{i}$$

and

$$E_{12} = \frac{\varepsilon}{2}\left(\frac{2\pi}{l}\right)\cos\frac{2\pi}{l}(x_1 - c_T\,t). \tag{ii}$$

and the stress components are

$$T_{12} = \mu\,\varepsilon\left(\frac{2\pi}{l}\right)\cos\frac{2\pi}{l}(x_1 - c_T\,t) \tag{iii}$$

Substitution of T_{ij} and u_i in the equations of motion, neglecting body forces, gives the phase velocity c_T to be

$$c_T = \sqrt{\mu/\rho_o} \tag{5.9.2}$$

Since, in this motion, the dilatation e is zero at all times, it is known as an **equivoluminal wave.** It is also called a **shear wave.**

Here again the phase velocity c_T is independent of the wavelength l, so that it again has the additional significance of being the wave velocity of a finite train of equivoluminal waves, or of any arbitrary equivoluminal disturbance into an undisturbed region.

The ratio of the two phase velocities c_L and c_T is

$$\frac{c_L}{c_T} = \left(\frac{\lambda + 2\mu}{\mu}\right)^{1/2} \tag{5.9.3}$$

Since $\lambda = 2\mu\,\nu/(1 - 2\nu)$, the ratio is found to depend only on ν, in fact

$$\frac{c_L}{c_T} = \left[\frac{2(1-\nu)}{1-2\nu}\right]^{1/2} = \left[\left(1 + \frac{1}{1-2\nu}\right)\right]^{1/2} \tag{5.9.4}$$

For steel with $\nu = 0.3$, $c_L/c_T = \sqrt{7/2} = 1.87$. We note that since $\nu < \frac{1}{2}$, c_L is always greater than c_T.

Example 5.9.1

Consider a displacement field

$$u_2 = \alpha \sin\frac{2\pi}{l}(x_1 - c_T t) + \beta \cos\frac{2\pi}{l}(x_1 - c_T t), \qquad u_1 = u_3 = 0 \tag{i}$$

for a material half-space that lies to the right of the plane $x_1 = 0$

(a) Determine α, β and l if the applied displacement on $x_1 = 0$ is given by $\mathbf{u} = (b \sin \omega t)\mathbf{e}_2$

(b) Determine α, β and l if the applied surface traction on $x_1 = 0$ is $\mathbf{t} = (d\sin \omega t)\mathbf{e}_2$

Solution. The problem is analogous to that of the previous example.

(a) Using $u_2(0,t) = b\sin \omega t$, we have

$$\beta = 0, \quad \alpha = -b, \quad l = \frac{2\pi c_T}{\omega} \tag{ii}$$

and

$$u_2 = -b\sin\frac{\omega}{c_T}(x_1 - c_T t) \tag{iii}$$

(b) Using $\mathbf{t} = -T_{21}\mathbf{e}_2 = (d\sin \omega t)\mathbf{e}_2$ gives

$$\alpha = 0, \quad \beta = -\frac{dc_T}{\mu\,\omega}, \quad l = \frac{2\pi c_T}{\omega}$$

and

$$u_2 = -\frac{dc_T}{\mu\,\omega}\cos\frac{\omega}{c_T}(x_1 - c_T t)$$

Example 5.9.2

Consider the displacement field

$$u_3 = \alpha\cos p\,x_2 \cos\frac{2\pi}{l}(x_1 - c\,t)\,, \quad u_2 = u_1 = 0 \tag{i}$$

(a) Show that this is an equivoluminal motion.

(b) From the equation of motion, determine the phase velocity c in terms of $p\,, l\,, \rho_o$ and μ (assuming no body forces).

(c) This displacement field is used to describe a type of wave guide that is bounded by the plane $x_2 = \pm h$. Find the phase velocity c if these planes are traction free.

Solution. (a) Since

$$\text{div}\mathbf{u} = \frac{\partial u_1}{\partial x_1} + \frac{\partial u_2}{\partial x_2} + \frac{\partial u_3}{\partial x_3} = 0 + 0 + 0 = 0 \tag{ii}$$

thus, there is no change of volume at any time.

(b) For convenience, let $k = \dfrac{2\pi}{l}$ and $\omega = kc = \dfrac{2\pi c}{l}$, then

$$u_3 = \alpha\cos p x_2 \cos(kx_1 - \omega\,t), \tag{iii}$$

where k is known as the wave number and ω is the circular frequency. The only nonzero stresses are given by (note: $u_1 = u_2 = 0$)

$$T_{13} = T_{31} = \mu\frac{\partial u_3}{\partial x_1} = \alpha\,\mu\,k[-\cos p x_2 \sin(kx_1 - \omega\,t)], \tag{iv}$$

$$T_{23} = T_{32} = \mu\frac{\partial u_3}{\partial x_2} = \alpha\,\mu\,p[-\sin p x_2 \cos(kx_1 - \omega\,t)], \tag{v}$$

The substitution of the stress components into the third equation of motion yields (the first two equations are trivially satisfied)

$$\frac{\partial T_{31}}{\partial x_1} + \frac{\partial T_{32}}{\partial x_2} = (\mu\,k^2 + \mu\,p^2)(-u_3) = \rho_o\frac{\partial^2 u_3}{\partial t^2} = \rho_o\,\omega^2(-u_3) \tag{vi}$$

Therefore, with $c_T^2 = \mu/\rho_o$,

$$k^2 = \frac{\rho_o}{\mu}\omega^2 - p^2 = \left(\frac{\omega}{c_T}\right)^2 - p^2 \tag{vii}$$

Since $k = 2\pi/l$, and $\omega = 2\pi c/l$, therefore

$$c = c_T\left[\left(\frac{lp}{2\pi}\right)^2 + 1\right]^{\frac{1}{2}} \tag{viii}$$

(c) to satisfy the traction free boundary condition at $x_2 = \pm h$, we require that

$$\mathbf{t} = \pm\mathbf{T}\mathbf{e}_2 = \pm(T_{12}\mathbf{e}_1 + T_{22}\mathbf{e}_2 + T_{32}\mathbf{e}_3) = \pm T_{32}\mathbf{e}_3 = 0 \tag{ix}$$

therefore, $T_{32}]_{x_2=\pm h} = -\pm u\,p\,\alpha \sin ph \cos(kx_1 - \omega t) = 0$. In order for this relation to be satisfied for all x_1 and t, we must have

$$\sin ph = 0 \tag{x}$$

Thus,

$$p = \frac{n\pi}{h}, \quad n = 0, 1, 2, \ldots \tag{xi}$$

Each value of n determines a possible displacement field, and the phase velocity c corresponding to each mode is given by

$$c = c_r\left[\left(\frac{nl}{2h}\right)^2 + 1\right]^{\frac{1}{2}} \tag{xii}$$

This result indicates that the equivoluminal wave is propagating with a speed c greater than the speed of a plane equivoluminal wave c_T. Note that when $p = 0$, $c = c_T$ as expected.

Example 5.9.3

An infinite train of harmonic plane waves propagates in the direction of the unit vector $\mathbf{e}_n$. Express the displacement field in vector form for (a) a longitudinal wave, (b) a transverse wave.

Solution. Let $\mathbf{x}$ be the position vector of any point on a plane whose normal is $\mathbf{e}_n$ and whose distance from the origin is d (Fig. 5.3). Then $\mathbf{x}\cdot\mathbf{e}_n = d$. Thus, in order that the particles on the plane be at the same phase of the harmonic oscillation at any one time, the argument of

sine (or cosine) must be of the form $(2\pi/l)(\mathbf{x}\cdot\mathbf{e}_n - ct - \eta)$, where η is an arbitrary constant.

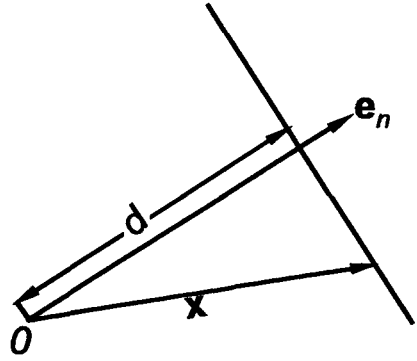

Fig. 5.3

a) For longitudinal waves, $\mathbf{u}$ is parallel to $\mathbf{e}_n$, thus

$$\mathbf{u} = \varepsilon \sin\left[\frac{2\pi}{l}(\mathbf{x}\cdot\mathbf{e}_n - c_L t - \eta)\right]\mathbf{e}_n \tag{i}$$

In particular, if $\mathbf{e}_n = \mathbf{e}_1$,

$$u_1 = \varepsilon \sin\left[\frac{2\pi}{l}(x_1 - c_L t - \eta)\right], \quad u_2 = u_3 = 0 \tag{ii}$$

(b) For transverse waves, $\mathbf{u}$ is perpendicular to $\mathbf{e}_n$. Let $\mathbf{e}_t$ be a unit vector perpendicular to $\mathbf{e}_n$. Then

$$\mathbf{u} = \varepsilon\left[\sin\frac{2\pi}{l}(\mathbf{x}\cdot\mathbf{e}_n - c_T t - \eta)\right]\mathbf{e}_t \tag{iii}$$

The plane of $\mathbf{e}_t$ and $\mathbf{e}_n$ is known as the plane of polarization. In particular, if $\mathbf{e}_n = \mathbf{e}_1$, $\mathbf{e}_t = \mathbf{e}_2$, then

$$u_1 = 0, \quad u_2 = \varepsilon \sin\frac{2\pi}{l}(x_1 - c_T t - \eta), \quad u_3 = 0 \tag{iv}$$

Example 5.9.4

In Fig. 5.4, all three unit vectors $\mathbf{e}_{n_1}$, $\mathbf{e}_{n_2}$ and $\mathbf{e}_{n_3}$ lie in the x_1x_2 plane. Express the displacement components with respect to the x_i coordinates of plane harmonic waves for

(a) a transverse wave of amplitude ε_1 wavelength l_1 polarized in the $x_1 x_2$ plane and propagating in the direction of $\mathbf{e}_{n_1}$.

(b) a transverse wave of amplitude ε_2 wavelength l_2 polarized in the $x_1 x_2$ plane and propagating in the direction of $\mathbf{e}_{n_2}$.

(c) a longitudinal wave of amplitude ε_3 wavelength l_3 propagating in the direction of $\mathbf{e}_{n_3}$

Solution. Using the results of Example 5.9.3, we have, (a)

$$\mathbf{e}_{n_1} = \sin\alpha_1 \mathbf{e}_1 - \cos\alpha_1 \mathbf{e}_2, \quad \mathbf{x}\cdot\mathbf{e}_{n_1} = x_1 \sin\alpha_1 - x_2 \cos\alpha_1, \quad \mathbf{e}_{t_1} = \pm(\cos\alpha_1 \mathbf{e}_1 + \sin\alpha_1 \mathbf{e}_2) \tag{i}$$

Thus,

$$\begin{aligned} u_1 &= \cos\alpha_1\, \varepsilon_1 \sin[2\pi/l_1\,(x_1 \sin\alpha_1 - x_2 \cos\alpha_1 - c_T t - \eta_1)] \\ u_2 &= \sin\alpha_1\, \varepsilon_1 \sin[2\pi/l_1\,(x_1 \sin\alpha_1 - x_2 \cos\alpha_1 - c_T t - \eta_1)] \\ u_3 &= 0 \end{aligned} \tag{ii}$$

(b)

$$\mathbf{e}_{n_2} = \sin\alpha_2\, \mathbf{e}_1 + \cos\alpha_2\, \mathbf{e}_2, \quad \mathbf{x}\cdot\mathbf{e}_{n_2} = x_1 \sin\alpha_2 + x_2 \cos\alpha_2, \quad \mathbf{e}_{t_2} = \pm(\cos\alpha_2\, \mathbf{e}_1 - \sin\alpha_2\, \mathbf{e}_2) \tag{iii}$$

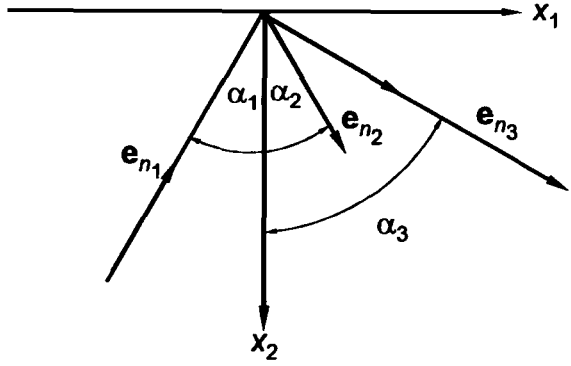

Fig. 5.4

$$\begin{aligned} u_1 &= \cos\alpha_2\, \varepsilon_2 \sin[2\pi/l_2\,(x_1 \sin\alpha_2 + x_2 \cos\alpha_2 - c_T t - \eta_2)] \\ u_2 &= -\sin\alpha_2\, \varepsilon_2 \sin[2\pi/l_2\,(x_1 \sin\alpha_2 + x_2 \cos\alpha_2 - c_T t - \eta_2)] \\ u_3 &= 0 \end{aligned} \tag{iv}$$

(c)

$$\mathbf{e}_{n_3} = \sin\alpha_3\, \mathbf{e}_1 + \cos\alpha_3\, \mathbf{e}_2, \quad \mathbf{x}\cdot\mathbf{e}_{n_3} = x_1 \sin\alpha_3 + x_2 \cos\alpha_3 \tag{v}$$

$$u_1 = \sin\alpha_3\, \varepsilon_3 \sin[2\pi/l_3\,(x_1 \sin\alpha_3 + x_2 \cos\alpha_3 - c_L t - \eta_3)]$$

$$u_2 = \cos\alpha_3\,\varepsilon_3 \sin[2\pi/l_3\,(x_1 \sin\alpha_3 + x_2\cos\alpha_3 - c_L\,t - \eta_3\,)] \tag{vi}$$

$$u_3 = 0$$

5.10 Reflection of Plane Elastic Waves.

In Fig. 5.5, the plane $x_2 = 0$ is the free boundary of an elastic medium, occupying the lower half-space $x_2 \geq 0$. We wish to study how an incident plane wave is reflected by the boundary. Consider an incident transverse wave of wavelength l_1, polarized in the plane of incidence with an incident angle α_1, (see Fig. 5.5). Since $x_2 = 0$ is a free boundary, the surface traction on the plane is zero at all times. Thus, the boundary will generate reflection waves in such a way that when they are superposed on the incident wave, the stress vector on the boundary vanishes at all times.

Let us superpose on the incident transverse wave two reflection waves (see Fig. 5.5), one transverse, the other longitudinal, both oscillating in the plane of incidence. The reason for superposing not only a reflected transverse wave but also a longitudinal one is that if only one is superposed, the stress-free condition on the boundary in general cannot be met, as will become obvious in the following derivation.

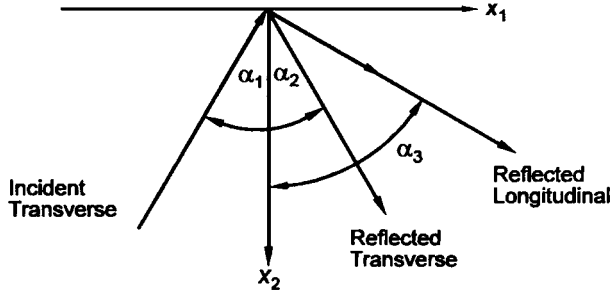

Fig. 5.5

Let u_i denote the displacement components of the superposition of the three waves, then from the results of Example 5.9.4, we have

$$\begin{aligned} u_1 &= \cos\alpha_1\,\varepsilon_1 \sin\varphi_1 + \cos\alpha_2\,\varepsilon_2 \sin\varphi_2 + \sin\alpha_3\,\varepsilon_3 \sin\varphi_3 \\ u_2 &= \sin\alpha_1\,\varepsilon_1 \sin\varphi_1 - \sin\alpha_2\,\varepsilon_2 \sin\varphi_2 + \cos\alpha_3\,\varepsilon_3 \sin\varphi_3 \\ u_3 &= 0 \end{aligned} \tag{i}$$

where

$$\begin{aligned} \varphi_1 &= \frac{2\pi}{l_1}(x_1 \sin\alpha_1 - x_2 \cos\alpha_1 - c_T t - \eta_1\,) \\ \varphi_2 &= \frac{2\pi}{l_2}(x_1 \sin\alpha_2 + x_2 \cos\alpha_2 - c_T t - \eta_2\,) \end{aligned} \tag{ii}$$

$$\varphi_3 = \frac{2\pi}{l_3}(x_1 \sin\alpha_3 + x_2 \cos\alpha_3 - c_L t - \eta_3)$$

On the free boundary ($x_2 = 0$), where $\mathbf{n} = -\mathbf{e}_2$, the condition $\mathbf{t} = \mathbf{0}$ leads to

$$\mathbf{T}\mathbf{e}_2 = \mathbf{0} \tag{iii}$$

i.e.,

$$T_{12} = T_{22} = T_{32} = 0 \tag{iv}$$

Using Hooke's law, and noting that $u_3 = 0$ and u_2 does not depend on x_3, we easily see that the condition $T_{32} = 0$ is automatically satisfied. The other two conditions, in terms of displacement components, are

$$\frac{\partial u_1}{\partial x_2} + \frac{\partial u_2}{\partial x_1} = 0 \quad \text{on} \quad x_2 = 0 \tag{v}$$

$$(\lambda + 2\mu)\frac{\partial u_2}{\partial x_2} + \lambda \frac{\partial u_1}{\partial x_1} = 0 \quad \text{on} \quad x_2 = 0 \tag{vi}$$

Performing the required differentiation, we obtain from Eqs. (v) and (vi)

$$\frac{\varepsilon_1}{l_1}(\sin^2\alpha_1 - \cos^2\alpha_1)\cos\varphi_1 + \frac{\varepsilon_2}{l_2}(\cos^2\alpha_2 - \sin^2\alpha_2)\cos\varphi_2 + \frac{\varepsilon_3}{l_3}(\sin 2\alpha_3)\cos\varphi_3 = 0 \tag{vii}$$

$$\frac{\varepsilon_1}{l_1}\mu \sin 2\alpha_1 \cos\varphi_1 + \frac{\varepsilon_2}{l_2}\mu \sin 2\alpha_2 \cos\varphi_2 - \frac{\varepsilon_3}{l_3}(\lambda + 2\mu\cos^2\alpha_3)\cos\varphi_3 = 0 \tag{viii}$$

Since these equations are to be satisfied on $x_2 = 0$ for whatever values of x_1 and t, we must have

$$\cos\varphi_1 = \cos\varphi_2 = \cos\varphi_3 \quad \text{on } x_2 = 0 \tag{ix}$$

so that they drop out from Eq. (vii) and (viii). Thus, at

$$x_2 = 0, \quad \varphi_1 = \varphi_2 \pm 2p\pi = \varphi_3 \pm 2q\pi$$

where p and q are integers, i.e.,

$$\frac{2\pi}{l_1}(x_1 \sin\alpha_1 - c_T t - \eta_1) = \frac{2\pi}{l_2}(x_1 \sin\alpha_2 - c_T t - \eta_2')$$
$$= \frac{2\pi}{l_3}(x_1 \sin\alpha_3 - c_L t - \eta_3') \tag{x}$$

where $\eta_2' = \eta_2 - (\pm p\, l_2)$ and $\eta_3' = \eta_3 - (\pm p\, l_3)$

Equation (x) can be satisfied for whatever values of x_1 and t only if

$$\frac{\sin\alpha_1}{l_1} = \frac{\sin\alpha_2}{l_2} = \frac{\sin\alpha_3}{l_3} \tag{xi}$$

$$\frac{c_T}{l_1} = \frac{c_T}{l_2} = \frac{c_L}{l_3} \tag{xii}$$

and

$$\frac{\eta_1}{l_1} = \frac{\eta_2{}'}{l_2} = \frac{\eta_3{}'}{l_3} \tag{xiii}$$

Thus,

$$l_2 = l_1, \quad n\, l_3 = l_1 \tag{xiv}$$

where

$$\frac{1}{n} = \frac{c_L}{c_T} = \left(\frac{\lambda + 2\mu}{\mu}\right)^{1/2} \tag{xv}$$

$$\alpha_1 = \alpha_2 \tag{xvi}$$

$$n \sin\alpha_3 = \sin\alpha_1 \tag{xvii}$$

$$\eta_2{}' = \eta_1, \quad n\,\eta_3{}' = \eta_1 \tag{xviii}$$

That is, the reflected transverse wave has the same wavelength as that of the incident transverse wave and the angle of reflection is the same as the incident angle, the longitudinal wave has a different wavelength and a different reflection angle depending on the so-called "refraction index n."

With $\cos\varphi_i$ dropped out, and in view of Eqs. (xiv) to (xviii), the boundary conditions (vii) and (viii) now become

$$\varepsilon_1 (\sin^2\alpha_1 - \cos^2\alpha_1) + \varepsilon_2 (\cos^2\alpha_1 - \sin^2\alpha_1) + \varepsilon_3 n \sin 2\alpha_3 = 0 \tag{xix}$$

$$\varepsilon_1 (\mu \sin 2\alpha_1) + \varepsilon_2 (\mu \sin 2\alpha_1) - \varepsilon_3 n (2\mu \cos^2\alpha_3 + \lambda) = 0 \tag{xx}$$

These two equations uniquely determine the amplitudes of the reflected waves in terms of the incident amplitude (which is arbitrary). In fact

$$\varepsilon_3 = \frac{n \sin 4\alpha_1}{\cos^2 2\alpha_1 + n^2 \sin 2\alpha_1 \sin 2\alpha_3}\varepsilon_1 \tag{xxi}$$

$$\varepsilon_2 = \frac{\cos^2 2\alpha_1 - n^2 \sin 2\alpha_1 \sin 2\alpha_3}{\cos^2 2\alpha_1 + n^2 \sin 2\alpha_1 \sin 2\alpha_3}\varepsilon_1 \tag{xxii}$$

Thus, the problem of the reflection of a transverse wave polarized in the plane of incidence is solved. We mention that if the incident transverse wave is polarized normal to the plane of incidence, no longitudinal component occurs. Also, when an incident longitudinal wave is reflected, in addition to the regularly reflected longitudinal wave, there is also a transverse wave polarized in the plane of incidence.

Equation (xvii) is analogous to Snell's law in optics, except here we have reflection instead of refraction. If $\sin\alpha_1 > n$, then $\sin\alpha_3 > 1$ and there is no longitudinal reflected wave but rather, waves of a more complicated nature will be generated. The angle $\alpha_1 = \sin^{-1} n$ is called the critical angle.

5.11 Vibration of an Infinite Plate

Consider an infinite plate bounded by the planes $x_1 = 0$ and $x_1 = l$. These plane faces may have either a prescribed motion or a prescribed surface traction.

The presence of these two boundaries indicates the possibility of a vibration (a standing wave). We begin by assuming the vibration to be of the form

$$u_1 = u_1(x_1, t), \quad u_2 = u_3 = 0 \tag{5.11.1}$$

and, just as for longitudinal waves, the displacement must satisfy the equation

$$c_L^2 \frac{\partial^2 u_1}{\partial x_1^2} = \frac{\partial^2 u_1}{\partial t^2} \tag{5.11.2}$$

A steady-state vibration solution to this equation is of the form

$$u_1 = (A \cos\lambda x_1 + B \sin\lambda x_1)(C \cos c_L \lambda t + D \sin c_L \lambda t) \tag{5.11.3}$$

where the constant A, B, C, D, and λ are determined by the boundary conditions. This vibration mode is sometimes termed a **thickness stretch** vibration because the plate is being stretched through its thickness. It is analogous to acoustic vibration of organ pipes and to the longitudinal vibration of slender rods.

Another vibration mode can be obtained by assuming the displacement field

$$u_2 = u_2(x_1, t), \quad u_1 = u_3 = 0 \tag{5.11.4}$$

In this case, the displacement field must satisfy the equation

$$c_T^2 \frac{\partial^2 u_2}{\partial x_1^2} = \frac{\partial^2 u_2}{\partial t^2} \tag{5.11.5}$$

and the solution is of the same form as in the previous case. This vibration is termed **thickness-shear** and it is analogous to the vibrating string.

Example 5.11.1

(a) Find the thickness -stretch vibration of a plate, where the left face ($x_1 = 0$) is subjected to a forced displacement $\mathbf{u} = (\alpha\cos\omega t)\mathbf{e}_1$ and the right face ($x_1 = l$) is fixed.

(b) Determine the values of ω that give resonance.

Solution. (a) Using Eq. (5.11.3) and the first boundary condition, we have

$$\alpha\cos\omega t = u_1(0,t) = AC\cos c_L\lambda t + AD\sin c_L\lambda t \tag{i}$$

Therefore

$$AC = \alpha, \quad \lambda = \frac{\omega}{c_L}, \quad D = 0 \tag{ii}$$

The second boundary condition gives

$$0 = u_1(l,t) = \left(\alpha\cos\frac{\omega l}{c_L} + BC\sin\frac{\omega l}{c_L}\right)\cos\omega t \tag{iii}$$

Therefore

$$BC = -\alpha\cot\frac{\omega l}{c_L} \tag{iv}$$

and the vibration is given by

$$u_1(x_1,T) = \alpha\left[\cos\frac{\omega}{c_L}x_1 - \frac{\sin\frac{\omega}{c_L}x_1}{\tan\frac{\omega}{c_L}l}\right]\cos\omega t \tag{v}$$

(b) Resonance is indicated by unbounded displacements. This occurs for forcing frequencies corresponding to $\tan\omega l/c_L = 0$, that is, when †

$$\omega = \frac{n\pi c_L}{l}, \quad n = 1,2,3....$$

Example 5.11.2

(a) Find the thickness-shear vibration of an infinite plate which has an applied surface traction $\mathbf{t} = -(\beta\cos\omega t)\mathbf{e}_2$ on the plane $x_1 = 0$ and is fixed at the plane $x_1 = l$.

---

† These values of frequencies correspond to the natural free vibration frequencies with both faces fixed.

(b) Determine the resonance frequencies.

Solution. The traction on $x_1 = 0$ determines the stress $T_{12}|_{x_1=0} = \beta\cos\omega t$. This shearing stress forces a vibration of the form

$$u_2 = (A\cos\lambda x_1 + B\sin\lambda x_1)(C\cos c_T\lambda t + D\sin c_T\lambda t).$$

Using Hooke's law, we have

$$T_{12}\,|_{x_1=0} = \mu\frac{\partial u_2}{\partial x_1}\,|_{x_1=0} = \beta\cos\omega t \tag{i}$$

or,

$$\frac{\beta}{\mu}\cos\omega t = \lambda BC\cos c_T\lambda t + \lambda BD\sin c_T\lambda t \tag{ii}$$

Thus,

$$\lambda = \frac{\omega}{c_T},\quad D = 0,\quad BC = \frac{\beta c_T}{\omega\mu} \tag{iii}$$

The boundary condition at $x_1 = l$ gives

$$u_2(l,t) = 0 = \left(AC\cos\frac{\omega l}{c_T} + \frac{\beta c_T}{\omega\mu}\sin\frac{\omega l}{c_T}\right)\cos\omega t \tag{iv}$$

Thus,

$$AC = -\frac{\beta c_T}{\omega\mu}\tan\frac{\omega l}{c_T} \tag{v}$$

and

$$u_2(x_1,t) = \frac{\beta c_T}{\omega\mu}\left(\sin\frac{\omega}{c_T}x_1 - \tan\frac{\omega l}{c_T}\cos\frac{\omega}{c_T}x_1\right)\cos\omega t \tag{vi}$$

(b) Resonance occurs for

$$\tan\frac{\omega l}{c_T} = \infty$$

or

$$\omega = \frac{n\pi c_T}{2l},\quad n = 1,3,5.... \tag{vii}$$

We remark that these values of ω correspond to free vibration natural frequencies with one face traction-free and one face fixed.

5.12 Simple Extension

In this section and the following several sections, we shall present some examples of elastostatic problems. We begin by considering the problem of simple extension. Again, in all these problems, we assume small deformations so that there is no need to make a distinction between the spatial coordinates and the material coordinates in the equations of motion and in the boundary conditions.

A cylindrical elastic bar of arbitrary cross-section (Fig. 5.6) is under the action of equal and opposite normal traction σ distributed uniformly at its end faces. Its lateral surface is free from any surface traction and body forces are assumed to be absent.

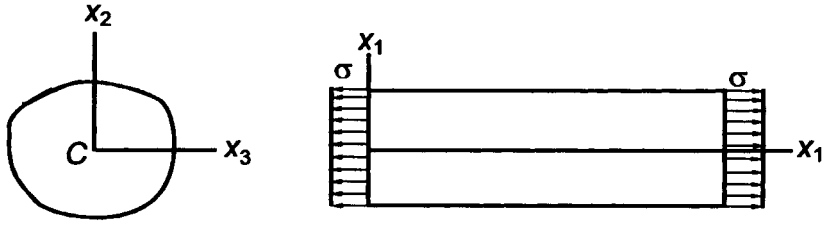

Fig. 5.6

Intuitively, one expects that the state of stress at any point will depend neither on the length of the bar nor on its lateral dimension. In other words, the state of stress in the bar is expected to be the same everywhere. Guided by the boundary conditions that on the planes $x_1 = 0$ and $x_1 = l$ $T_{11} = \sigma, T_{21} = T_{31} = 0$ and on the planes $x_2 =$ a constant and tangent to the lateral surface, $T_{12} = T_{22} = T_{32} = 0$, it seems reasonable to assume that for the whole bar

$$T_{11} = \sigma, \quad T_{22} = T_{23} = T_{12} = T_{13} = T_{23} = 0 \tag{5.12.1}$$

We now proceed to show that this state of stress is indeed the solution to our problem. We need to show that (i) all the equations of equilibrium are satisfied (ii) all the boundary conditions are satisfied and (iii) there exists a displacement field which corresponds to the assumed stress field.

(i) Since the stress components are all constants (either σ or zero), it is obvious that in the absence of body forces, the equations of equilibrium $\partial T_{ij}/\partial x_j = 0$ are identically satisfied.

(ii)The boundary condition on each of the end faces is obviously satisfied. On the lateral cylindrical surface,

$$\mathbf{n} = 0\mathbf{e}_1 + n_2\mathbf{e}_2 + n_3\mathbf{e}_3 \tag{i}$$

and

$$\mathbf{t} = \mathbf{Tn} = n_2(\mathbf{Te}_2) + n_3(\mathbf{Te}_3) = n_2(\mathbf{0}) + n_3(\mathbf{0}) = \mathbf{0} \tag{ii}$$

Thus, the traction-free condition on the whole lateral surface is satisfied.

(iii) From Hooke's law, the strain components are obtained to be

$$E_{11} = \frac{1}{E_Y}[T_{11} - \nu(T_{22} + T_{33})] = \frac{\sigma}{E_Y} \tag{5.12.2a}$$

$$E_{22} = \frac{1}{E_Y}[T_{22} - \nu(T_{33} + T_{11})] = -\nu\frac{\sigma}{E_Y} \tag{5.12.2b}$$

$$E_{33} = \frac{1}{E_Y}[T_{33} - \nu(T_{11} + T_{22})] = -\nu\frac{\sigma}{E_Y} \tag{5.12.2c}$$

$$E_{12} = E_{13} = E_{23} = 0 \tag{5.12.2d}$$

These strain components are constants, therefore, the equations of compatibility are automatically satisfied. In fact it is easily verified that the following single-valued continuous displacement field corresponds to the strain field of Eq. (5.12.2)

$$u_1 = \left(\frac{\sigma}{E_Y}\right)x_1, \quad u_2 = -\left(\nu\frac{\sigma}{E_Y}\right)x_2, \quad u_3 = -\left(\nu\frac{\sigma}{E_Y}\right)x_3 \tag{5.12.3}$$

Thus, we have completed the solution of the problem of simple extension ($\sigma > 0$) or compression ($\sigma < 0$). We note that Eq. (5.12.3) is the unique solution to Eqs. (5.12.2) if rigid body displacement fields (translation and rotation) are excluded.

If the constant cross-sectional area of the bar is A, the surface traction σ on either end face gives rise to a resultant force of magnitude

$$P = \sigma A \tag{5.12.4}$$

passing through the centroid of the area A. Thus, in terms of P and A, the stress components in the bar are

$$[\mathbf{T}] = \begin{bmatrix} \frac{P}{A} & 0 & 0 \\ 0 & 0 & 0 \\ 0 & 0 & 0 \end{bmatrix} \tag{5.12.5}$$

Since the matrix is diagonal, we know from Chapter 2, that the principal stresses are P/A, 0, 0. Thus, the maximum normal stress is

$$(T_n)_{\max} = \frac{P}{A} \tag{5.12.6}$$

It acts on normal cross-sectional planes, and the maximum shearing stress is

$$(T_s)_{\max} = \frac{P}{2A} \tag{5.12.7}$$

and it acts on planes making 45° with the normal cross-sectional plane.

Let the undeformed length of the bar be l and let Δl be its elongation. Then $E_{11} = \frac{\Delta l}{l}$ and from Eqs. (5.12.2a) and (5.12.4), we have

$$\Delta l = \frac{Pl}{AE_Y} \tag{5.12.8}$$

Also, if d is the undeformed length of a line in the transverse direction, its elongation Δd is given by

$$\Delta d = -\frac{\nu Pd}{AE_Y} \tag{5.12.9}$$

The minus sign indicates the expected contraction of the lateral dimension for a bar under tension.

In reality, when a bar is pulled, the exact nature of the distribution of surface traction is often not known, only the resultant force is known. The question naturally arises under what conditions can an elasticity solution such as the one we just obtained for simple extension be applicable to real problems. The answer to the question is given by the so-called **St. Venant's Principle** which can be stated as follows:

If some distribution of forces acting on a portion of the surface of body is replaced by a different distribution of forces acting on the same portion of the body, then the effects of the two different distributions on the parts of the body sufficiently far removed form the region of application of the forces are essentially the same, provided that the two distribution of forces have the same resultant force and the same resultant couple.

The validity of the principle can be demonstrated in specific instances and a number of sufficient conditions have been established. We state only that in most cases the principle has been proven to be in close agreement with experiments.

By invoking Saint-Venant's principle, we now regard the solution we just obtained for "simple extension" to be valid at least in most part of a slender bar, provided the resultant force on either end passes through the centroid of the cross-sectional area.

Example 5.12.1

A steel circular bar, 2 ft (0.61 m) long, 1 in. (2.54 cm) radius, is pulled by equal and opposite axial forces P at its ends. Find the maximum normal and shear stresses if P = 10,000 lbs (44.5 kN). $E_Y = 30\times10^6$ psi (207 GPa.) and $\nu = 0.3$.

Solution. The maximum normal stress is

$$(T_n)_{\max} = \frac{P}{A} = \frac{10{,}000}{\pi} = 3180 \text{ psi. } (21.9 \text{ Mpa.})$$

The maximum shearing stress is

$$(T_s)_{\max} = \frac{3180}{2} = 1590 \text{ psi. } (11.0 \text{ Mpa.})$$

and the total elongation is

$$\Delta l = \frac{Pl}{AE_Y} = \frac{(10{,}000)(2\times 12)}{\pi\,(30\times 10^6)} = 2.54\times 10^{-3} \text{ in. } (64.5\,\mu\text{m.})$$

The diameter will contract by an amount

$$-\Delta d = \frac{\nu P}{E_Y A} d = \frac{(0.3)(10{,}000)(2)}{(30\times 10^6)(\pi)} = 0.636\times 10^{-4} \text{ in. } (1.61\,\mu\text{m.})$$

Example 5.12.2

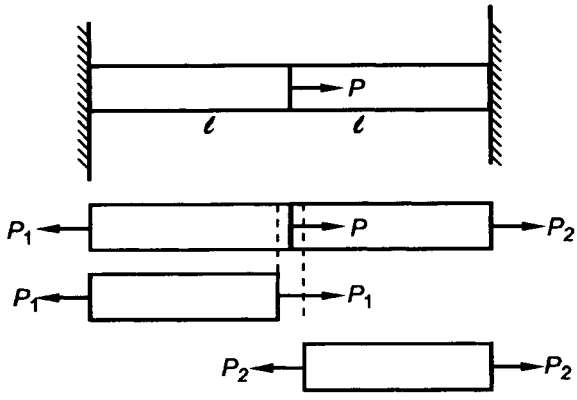

Fig. 5.7

A composite bar, formed by welding two slender bars of equal length and equal cross-sectional area, is loaded by an axial force P as shown in Fig. 5.7. If Young's moduli of the two portions are $E_Y^{(1)}$ and $E_Y^{(2)}$, find how the applied force is distributed between the two halves.

Solution. Taking the whole bar as a free body, the equation of static equilibrium requires that

$$P = P_1 - P_2 \tag{i}$$

Statics alone does not determine the distribution of the load (a statically indeterminate problem), so we must consider the deformation induced by the load P. In this problem, there is no net elongation of the composite bar, therefore

$$\frac{P_1 l}{A E_Y^{(1)}} + \frac{P_2 l}{A E_Y^{(2)}} = 0 \tag{ii}$$

Combining Eqs. (i) and (ii), we obtain

$$P_1 = \frac{P}{1 + (E_Y^{(2)}/E_Y^{(1)})}, \qquad P_2 = \frac{-P}{1 + (E_Y^{(1)}/E_Y^{(2)})} \tag{iii}$$

If in particular, Young's moduli are $E_Y^{(1)} = 207$ GPa (steel) and $E_Y^{(2)} = 69$ GPa.(aluminum), then

$$P_1 = \frac{3P}{4}, \quad P_2 = \frac{-P}{4} \tag{iv}$$

5.13 Torsion of a Circular Cylinder

Let us consider the elastic deformation of a cylindrical bar of circular cross-section (of radius a and length l), twisted by equal and opposite end moments M_t (see Fig. 5.8). We choose the x_1 axis to coincide with axis of the cylinder and the left and right faces to correspond to the plane $x_1 = 0$ and $x_1 = l$ respectively

By the symmetry of the problem, it is reasonable to assume that the motion of each cross-sectional plane induced by the end moments is a rigid body rotation about the x_1 axis. This motion is similar to that of a stack of coins in which each coin is rotated by a slightly different angle than the previous coin. It is the purpose of this section to demonstrate that for a circular cross-section, this assumption of the deformation leads to an exact solution within the linear theory of elasticity.

Denoting the small rotation angle by θ, we evaluate the associated displacement field as

$$\mathbf{u} = (\theta \mathbf{e}_1) \times \mathbf{r} = (\theta \mathbf{e}_1) \times (x_1 \mathbf{e}_1 + x_2 \mathbf{e}_2 + x_3 \mathbf{e}_3) = \theta\,(x_2\,\mathbf{e}_3 - x_3\,\mathbf{e}_2) \tag{5.13.1a}$$

or,

$$u_1 = 0, \quad u_2 = -\theta x_3, \quad u_3 = \theta x_2 \tag{5.13.1b}$$

where $\theta = \theta\,(x_1)$

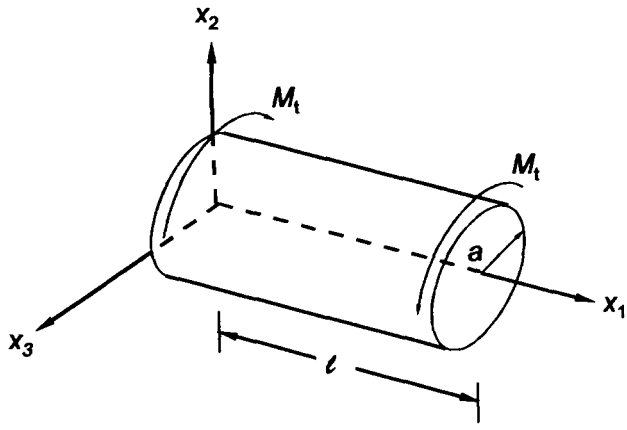

Fig. 5.8

Corresponding to this displacement field are the nonzero strains

$$E_{12} = E_{21} = -\frac{1}{2} x_3 \frac{\partial \theta}{\partial x_1} \tag{5.13.2a}$$

$$E_{13} = E_{31} = \frac{1}{2} x_2 \frac{\partial \theta}{\partial x_1} \tag{5.13.2b}$$

The nonzero stress components are , from Hooke's law

$$T_{12} = T_{21} = -\mu\, x_3 \frac{\partial \theta}{\partial x_1} \tag{5.13.3a}$$

$$T_{13} = T_{31} = \mu\, x_2 \frac{\partial \theta}{\partial x_1} \tag{5.13.3b}$$

To determine if this is a possible state of stress in the absence of body forces, we check the equilibrium equations $\partial T_{ij}/\partial x_j = 0$. The first equation is identically satisfied, whereas from the second and third equations we have

$$-\mu x_3 \left(\frac{d^2\theta}{d x_1^2} \right) = 0 \tag{5.13.4a}$$

$$+\mu x_2 \left(\frac{d^2\theta}{d x_1^2} \right) = 0 \tag{5.13.4b}$$

Thus,

$$\frac{d\theta}{dx_1} \equiv \theta' = \text{constant}. \tag{5.13.5}$$

Interpreted physically, we satisfy equilibrium if the increment in angular rotation (i.e, twist per unit length) is a constant. Now that the displacement field has been shown to generate a possible stress field, we must determine the surface tractions that correspond to the stress field.

On the lateral surface (see Fig. 5.9) we have a unit normal vector $\mathbf{n} = (1/a)(x_2\mathbf{e}_2 + x_3\mathbf{e}_3)$. Therefore, the surface traction on the lateral surface

$$[\mathbf{t}] = [\mathbf{T}]\,[\mathbf{n}] = \frac{1}{a}\begin{bmatrix} 0 & T_{12} & T_{13} \\ T_{21} & 0 & 0 \\ T_{31} & 0 & 0 \end{bmatrix}\begin{bmatrix} 0 \\ x_2 \\ x_3 \end{bmatrix} = \frac{1}{a}\begin{bmatrix} x_2 T_{12} + x_3 T_{13} \\ 0 \\ 0 \end{bmatrix} \tag{5.13.6}$$

Substituting from Eqs. (5.13.3) and (5.13.5), we have

$$\mathbf{t} = \frac{\mu}{a}(-x_2 x_3 \theta' + x_2 x_3 \theta')\mathbf{e}_1 = \mathbf{0} \tag{5.13.7}$$

Thus, in agreement with the fact that the bar is twisted by end moments only, the lateral surface is traction free.

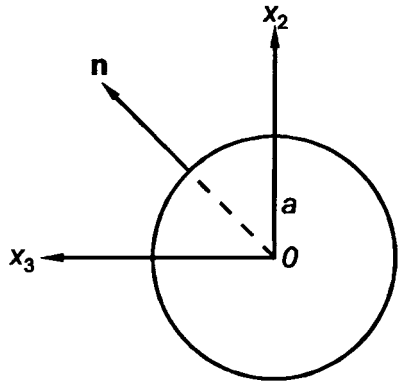

Fig. 5.9

On the face $x_1 = l$, we have a unit normal $\mathbf{n} = \mathbf{e}_1$ and a surface traction

$$\mathbf{t} = \mathbf{T}\mathbf{e}_1 = T_{21}\mathbf{e}_2 + T_{31}\mathbf{e}_3 \tag{5.13.8}$$

This distribution of surface traction on the end face gives rise to the following resultant (Fig. 5.10)

$$R_1 = \int T_{11}\, dA = 0 \tag{5.13.9a}$$

$$R_2 = \int T_{21}\, dA = -\mu\, \theta\, ' \int x_3\, dA = 0 \tag{5.13.9b}$$

$$R_3 = \int T_{31}\, dA = \mu\, \theta\, ' \int x_2\, dA = 0 \tag{5.13.9c}$$

$$M_1 = \int (x_2 T_{31} - x_3\, T_{21})dA = \mu\, \theta\, ' \int (x_2^2 + x_3^2)dA = \mu\, \theta\, ' I_p \tag{5.13.9d}$$

$$M_2 = M_3 = 0 \tag{5.13.9e}$$

where $I_p = \pi\, a^4/2$ is the polar moment of inertia of the cross-sectional area. We also note that $\int x_2\, dA = \int x_3 dA = 0$ because the area is symmetrical with respect to the axes.

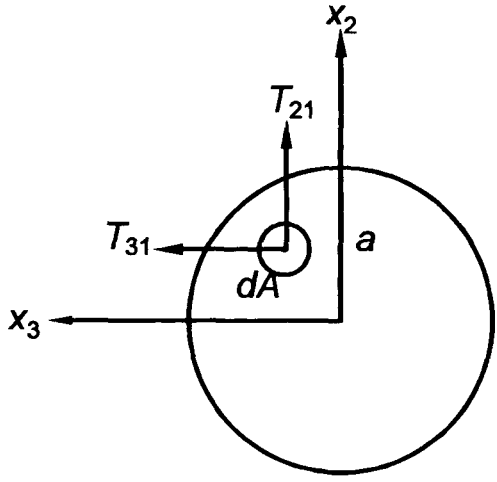

Fig. 5.10

The resultant force system on the face $x_1 = 0$ will similarly give rise to a counter-balancing couple $-\mu\theta\, ' I_p$. Therefore, the resultant force system on either end face is a twisting couple $M_1 = M_t$ and it induces a twist per unit length given by

$$\theta\, ' = \frac{M_t}{\mu\, I_p} \tag{5.13.10}$$

This indicates that we can, as indicated in Section 5.1, determine the shear modulus from a simple torsion experiment.

In terms of the twisting couple M_t, the stress tensor becomes

$$[\mathbf{T}] = \begin{bmatrix} 0 & -\dfrac{M_t x_3}{I_p} & \dfrac{M_t x_2}{I_p} \\ \dfrac{-M_t x_3}{I_p} & 0 & 0 \\ \dfrac{M_t x_2}{I_p} & 0 & 0 \end{bmatrix} \tag{5.13.11}$$

In reality, when a bar is twisted the exact distribution of the applied forces is rarely, if ever known. Invoking St. Venant's principle, we conclude that as long as the resultants of the applied forces on the two ends of a slender bar are equal and opposite couples of strength M_t, the state of stress inside the bar is given by Eq. (5.13.11).

Example 5.13.1

For a circular bar of radius a in torsion (a) find the magnitude and location of the greatest normal and shearing stresses throughout the bar; (b) find the principal direction at the position $x_2 = 0$, $x_3 = a$.

Solution. (a) We first evaluate the principal stresses as a function of position by solving the characteristic equation

$$\lambda^3 - \lambda \left(\frac{M_t}{I_p}\right)^2 (x_2^2 + x_3^2) = 0 \tag{i}$$

Thus, the principal values at any point are

$$\lambda = 0 \quad \text{and} \quad \lambda = \pm\frac{M_t}{I_p}\left(x_2^2 + x_3^2\right)^{1/2} = \pm\frac{M_t r}{I_p} \tag{ii}$$

where r is the distance from the axis of the bar.

In this case, the magnitude of the maximum shearing and normal stress at any point are equal and are proportional to the distance r. Therefore, the greatest shearing and normal stress both occur on the boundary, $r = a$ with

$$(T_n)_{\max} = (T_s)_{\max} = \frac{M_t a}{I_p} \tag{5.13.12}$$

(b) For the principal value $\lambda = M_t a/I_p$ at the boundary points $(x_1, 0, a)$ the eigenvector equation becomes

$$-\frac{M_t a}{I_p} n_1 - \frac{M_t a}{I_p} n_2 = 0 \tag{iii}$$

$$-\frac{M_t a}{I_p} n_1 - \frac{M_t a}{I_p} n_2 = 0 \tag{iv}$$

$$-\frac{M_t a}{I_p} n_3 = 0 \tag{v}$$

Therefore, the eigenvector is given by $\mathbf{n} = (\sqrt{2}/2)(\mathbf{e}_1 - \mathbf{e}_2)$. This normal determines a plane perpendicular to the lateral face which makes a 45° angle with the x_1-axis. Frequently, a crack along a helix inclined at 45° to the axis of a circular cylinder under torsion is observed. This is especially true for brittle materials such as cast iron.

Example 5.13.2

In Fig. 5.11, a twisting torque M_t is applied to the rigid disc A. Find the twisting moments transmitted to the circular shafts on either side of the disc.

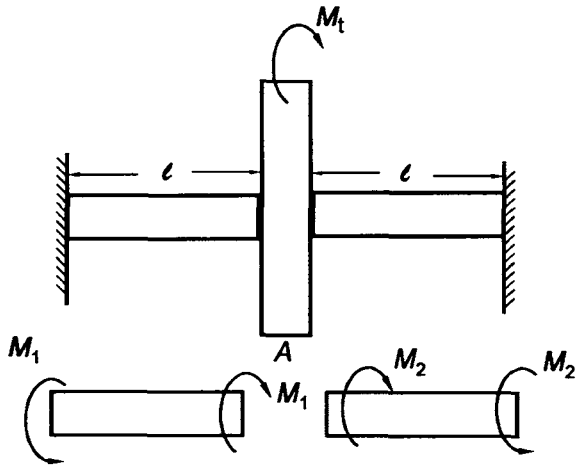

Fig. 5.11

Solution. Let M_1 be the twisting moment transmitted to the left shaft and M_2 that to the right shaft. Then, the equilibrium of the disc demands that

$$M_1 + M_2 = M_t \tag{i}$$

In addition, because the disc is assumed to be rigid, the angle of twist of the left and right shaft must be equal:

$$\frac{M_t l_1}{\mu I_p} = \frac{M_t l_2}{\mu I_p} \tag{ii}$$

Thus,

$$M_1 l_1 = M_2 l_2 \tag{iii}$$

From Eqs. (i) and (iii), we then obtain

$$M_1 = \left(\frac{l_2}{l_1 + l_2}\right) M_t, \quad M_2 = \left(\frac{l_1}{l_1 + l_2}\right) M_t \tag{iv}$$

Example 5.13.3

Consider the angle of twist for a circular cylinder under torsion to be a function of x_1 and time t, i.e., $\theta = \theta(x_1, t)$.

(a) Determine the differential equation that θ must satisfy for it to be a possible solution in the absence of body forces. What are the boundary conditions that θ must satisfy (b) if the plane $x_1 = 0$ is a fixed end; (c) if the plane $x_1 = 0$ is a free end.

Solution. (a) From the displacements

$$u_1 = 0, \quad u_2 = -\theta(x_1, t)\, x_3, \quad u_3 = \theta(x_1, t)\, x_2 \tag{i}$$

we find the stress to be

$$T_{12} = T_{21} = 2\mu E_{12} = -\mu x_3 \frac{\partial \theta}{\partial x_1} \tag{iia}$$

$$T_{13} = T_{31} = 2\mu E_{13} = \mu x_2 \frac{\partial \theta}{\partial x_1} \tag{iib}$$

and

$$T_{11} = T_{22} = T_{33} = T_{23} = 0 \tag{iic}$$

The second and third equations of motion give

$$-\mu x_3 \frac{\partial^2 \theta}{\partial x_1^2} = -\rho_o x_3 \frac{\partial^2 \theta}{\partial t^2} \tag{iiia}$$

$$\mu x_2 \frac{\partial^2 \theta}{\partial x_1^2} = \rho_o x_2 \frac{\partial^2 \theta}{\partial t^2} \tag{iiib}$$

Therefore, $\theta(x_1, t)$ must satisfy the equation

$$c_T^2 \frac{\partial^2 \theta}{\partial x_1^2} = \frac{\partial^2 \theta}{\partial t^2} \tag{iv}$$

where $c_T = \sqrt{\mu/\rho_o}$.

(b) At the fixed end $x_1 = 0$, there is no displacement, therefore,

$$\theta(0, t) = 0 \tag{v}$$

(c) At the traction-free end $x_1 = 0$, $\mathbf{t} = -\mathbf{T}\mathbf{e}_1 = 0$. Thus, $T_{21}|_{x_1=0} = 0$, $T_{31}|_{x_1=0} = 0$, therefore,

$$\frac{\partial \theta}{\partial x_1}(0, t) = 0 \tag{vi}$$

Example 5.13.4

A cylindrical bar of square cross-section (see Fig. 5.12) is twisted by end moments. Show that the displacement field of the torsion of the circular bar does not give a correct solution to this problem.

Solution. The displacement field for the torsion of circular cylinders has already been shown to generate an equilibrium stress field. We therefore check if the surface traction of the lateral surface vanishes. The unit vector on the plane $x_3 = a$ is $\mathbf{e}_3$, so that the surface traction for the stress tensor of Eq. (5.13.1) is given by

$$\mathbf{t} = \mathbf{T}\mathbf{e}_3 = T_{13}\mathbf{e}_1 = \frac{M_t x_2}{I_p}\mathbf{e}_1$$

Similarly, there will be surface tractions in the $\mathbf{e}_1$ direction on the remainder of the lateral surface. Thus, the previously assumed displacement field must be altered. To obtain the actual solution for twisting by end moments only, we must somehow remove these axial surface tractions. As will be seen in the next section, this will cause the cross-sectional planes to warp.

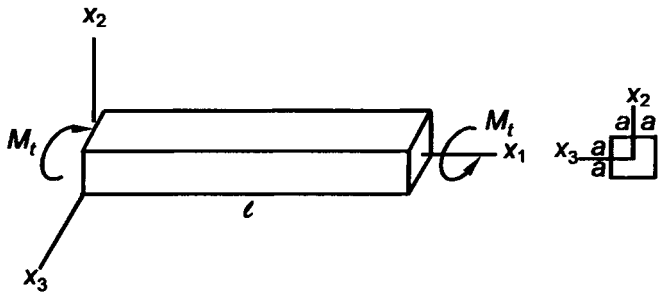

Fig. 5.12

5.14 Torsion of a Noncircular Cylinder

For cross-sections other than circular, the simple displacement field of Section 5.13 will not satisfy the tractionless lateral surface boundary condition (see Example 5.13.4). We will show that in order to satisfy this boundary condition, the cross-sections will not remain plane.

We begin by assuming a displacement field that still rotates each cross-section by a small angle θ, but in addition there may be a displacement in the axial direction. This warping of the cross-sectional plane will be defined by $u_1 = \varphi(x_2, x_3)$. Our displacement field now has the form

$$u_1 = \varphi(x_2, x_3), \quad u_2 = -x_3\,\theta(x_1), \quad u_3 = x_2\,\theta(x_1) \tag{5.14.1}$$

The associated nonzero strains and stresses are given by

$$T_{12} = T_{21} = 2\mu\, E_{12} = -\mu\, x_3\,\theta' + \mu\,\frac{\partial\varphi}{\partial x_2} \tag{5.14.2a}$$

$$T_{13} = T_{31} = 2\mu\, E_{13} = \mu\, x_2\,\theta' + \mu\,\frac{\partial\varphi}{\partial x_3} \tag{5.14.2b}$$

The second and third equilibrium equations are still satisfied if $\theta' =$ constant. However, the first equilibrium equation requires that

$$\frac{\partial^2\varphi}{\partial x_2^2} + \frac{\partial^2\varphi}{\partial x_3^2} = 0 \tag{5.14.3}$$

Therefore, the displacement field of Eq. (5.14.1) will generate a possible state of stress if φ satisfies Eq. (5.14.3). Now, we compute the traction on the lateral surface. Since the bar is

cylindrical, the unit normal to the lateral surface has the form $\mathbf{n} = n_2\mathbf{e}_2 + n_3\mathbf{e}_3$ and the associated surface traction is given by

$$\mathbf{t} = \mathbf{T}\mathbf{n} = [\,\mu\,\theta\,'(-n_2x_3 + n_3x_2) + \mu\left(\frac{\partial\varphi}{\partial x_2}n_2 + \frac{\partial\varphi}{\partial x_3}n_3\right)]\,\mathbf{e}_1$$
$$= [\,\mu\,\theta\,'(-n_2x_3 + n_3x_2) + \mu(\nabla\varphi)\cdot\mathbf{n}]\mathbf{e}_1 \tag{i}$$

We require that the lateral surface be traction-free, i.e., $\mathbf{t} = 0$, so that on the boundary the function φ must satisfy the condition

$$\frac{d\varphi}{dn} = (\nabla\varphi)\cdot\mathbf{n} = \theta\,'\,(n_2x_3 - n_3x_2) \tag{5.14.4}$$

Equations(5.14.3) and (5.14.4) define a well-known boundary-value problem† which is known to admit an exact solution for the function φ. Here, we will only consider the torsion of an elliptic cross-section by demonstrating that

$$\varphi = A\,x_2x_3 \tag{5.14.5}$$

gives the correct solution.

Taking A as a constant, this choice of φ obviously satisfy the equilibrium equation [Eq. (5.14.3)]. To check the boundary condition we begin by defining the elliptic boundary by the equation

$$f(x_2, x_3) = \frac{x_2^2}{a^2} + \frac{x_3^2}{b^2} = 1 \tag{ii}$$

The unit normal vector is given by

$$\mathbf{n} = \frac{\nabla f}{|\nabla f|} = \frac{2}{|\nabla f|}\left[\frac{x_2}{a^2}\mathbf{e}_2 + \frac{x_3}{b^2}\mathbf{e}_3\right] \tag{iii}$$

and the boundary condition of Eq. (5.14.4) becomes

$$\left(\frac{\partial\varphi}{\partial x_2}\right)b^2x_2 + \left(\frac{\partial\varphi}{\partial x_3}\right)a^2x_3 = \theta\,'\,x_2x_3\,(b^2 - a^2) \tag{iv}$$

Substituting our choice of φ into this equation, we find that

$$A = \theta\,'\left(\frac{b^2 - a^2}{a^2 + b^2}\right) \tag{5.14.6}$$

† It is known as a Neumann problem

Because A does turn out to be a constant, we have satisfied both Eq. (5.14.3) and (5.14.4). Substituting the value of φ into Eq. (5.14.2), we obtain the associated stresses

$$T_{21} = T_{12} = -\left(\frac{2\mu a^2}{a^2 + b^2}\right)\theta' x_3 \tag{5.14.7a}$$

$$T_{31} = T_{13} = \left(\frac{2\mu b^2}{a^2 + b^2}\right)\theta' x_2 \tag{5.14.7b}$$

This distribution of stress gives a surface traction on the end face, $x_1 = l$

$$\mathbf{t} = T_{21}\mathbf{e}_2 + T_{31}\mathbf{e}_3 \tag{v}$$

and the following resultant force system

$$R_1 = R_2 = R_3 = M_2 = M_3 = 0 \tag{vi}$$

$$M_1 = \int (x_2 T_{31} - x_3 T_{21})dA = \frac{2\mu\theta'}{a^2 + b^2}\left[a^2 \int x_3^2 dA + b^2 \int x_2^2 dA\right]$$

$$= \frac{2\mu\theta'}{a^2 + b^2}(a^2 I_{22} + b^2 I_{33}) \tag{vii}$$

Denoting $M_1 = M_t$ and recalling that for an ellipse $I_{33} = \pi a^3 b/4$ and $I_{22} = \pi b^3 a/4$, we obtain

$$\theta' = \frac{a^2 + b^2}{\pi a^3 b^3 \mu} M_t \tag{5.14.8}$$

Similarly the resultant on the other end face $x_1 = 0$ will give rise to a counterbalancing couple.

In terms of the twisting moment, the stress tensor becomes

$$[\mathbf{T}] = \begin{bmatrix} 0 & \dfrac{-2M_t x_3}{\pi a b^3} & \dfrac{2M_t x_2}{\pi a^3 b} \\ \dfrac{-2M_t x_3}{\pi a b^3} & 0 & 0 \\ \dfrac{2M_t x_2}{\pi a^3 b} & 0 & 0 \end{bmatrix} \tag{5.14.9}$$

Example 5.14.1

For an elliptic cylindrical bar in torsion, (a) find the magnitude of the maximum normal and shearing stress at any point of the bar, and (b) find the ratio of the maximum shearing stresses at the extremities of the elliptic minor and major axes.

Solution. As in Example 5.13.1, we first solve the characteristic equation

$$\lambda^3 - \lambda\left(\frac{2\,M_t}{\pi\,ab}\right)^2\left[\frac{x_2^2}{a^4}+\frac{x_3^2}{b^4}\right] = 0 \tag{i}$$

The principal values are

$$\lambda = 0\,, \quad \text{and} \quad \lambda = \pm\frac{2M_t}{\pi\,ab}\left(\frac{x_2^2}{a^4}+\frac{x_3^2}{b^4}\right)^{1/2} \tag{ii}$$

which determines the maximum normal and shearing stresses:

$$(T_s)_{\max} = (T_n)_{\max} = \frac{2M_t}{\pi\,ab}\left(\frac{x_2^2}{a^4}+\frac{x_3^2}{b^4}\right)^{1/2} \tag{5.14.10}$$

(b) Supposing that $b>a$, we have at the end of the minor axis ($x_2 = a,\ x_3 = 0$),

$$(T_s)_{\max} = \left(\frac{2M_t}{\pi\,ab}\right)\left(\frac{1}{a}\right) \tag{iii}$$

and at the end of major axis ($x_2 = 0\,,\ x_3 = b\,$)

$$(T_n)_{\max} = \left(\frac{2M_t}{\pi\,ab}\right)\left(\frac{1}{b}\right) \tag{iv}$$

The ratio of the maximum stresses is therefore b/a and the greater stress occurs at the end of the minor axis.

5.15 Pure Bending of a Beam

A beam is a bar acted on by forces or couples in an axial plane, which chiefly cause bending of the bar. When a beam or portion of a beam is acted on by end couples only, it is said to be in **pure bending** or **simple bending**. We shall consider the case of cylindrical bar of arbitrary cross-section that is in pure bending.

Figure 5.13 shows a bar of uniform cross-section. We choose the x_1 axis to pass through the cross-sectional centroids and let $x_1 = 0$ and $x_1 = l$ correspond to the left- and right-hand faces of the bar.

For the pure bending problem, we seek the state of stress that corresponds to a tractionless lateral surface and some distribution of normal surface tractions on the end faces that is statically equivalent to bending couples $\mathbf{M}_R = M_2\mathbf{e}_2 + M_3\mathbf{e}_3$ and $\mathbf{M}_L = -\mathbf{M}_R$ (note that the M_1 component is absent because M_1 is a twisting couple). Guided by the state of stress associated with simple extension, we tentatively assume that T_{11} is the only nonzero stress component and that it is an arbitrary function of x_1.

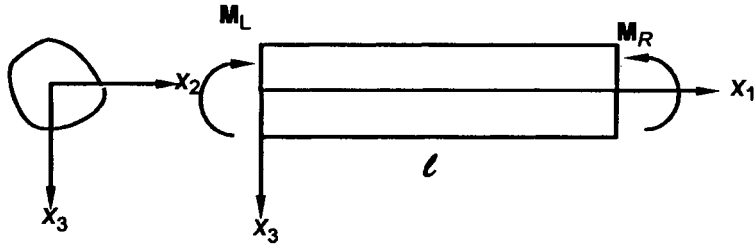

Fig. 5.13

To satisfy equilibrium, we require

$$\frac{\partial T_{11}}{\partial x_1} = 0 \tag{i}$$

i.e., $T_{11} = T_{11}(x_2, x_3)$. The corresponding strains are

$$E_{11} = \frac{1}{E_Y} T_{11}, \quad E_{22} = E_{33} = -\frac{\nu}{E_Y} T_{11}, \tag{iia}$$

$$E_{12} = E_{13} = E_{23} = 0 \tag{iib}$$

Since we have begun with an assumption on the state of stress, we must check whether these strains are compatible. Substituting the strains into the compatibility equations [Eq. (3.16.7-12) we obtain

$$\frac{\partial^2 T_{11}}{\partial x_2^2} = 0, \quad \frac{\partial^2 T_{11}}{\partial x_3^2} = 0, \quad \frac{\partial^2 T_{11}}{\partial x_3 \partial x_2} = 0 \tag{iii}$$

which can be satisfied only if T_{11} is at most a linear function of the form

$$T_{11} = \alpha + \beta x_2 + \gamma x_3 \tag{iv}$$

Now that we have a possible stress distribution, let us consider the nature of the boundary tractions. As is the case with simple extension, the lateral surface is obviously traction-free. On the end face $x_1 = l$, we have a surface traction

$$\mathbf{t} = \mathbf{T}\mathbf{e}_1 = T_{11}\,\mathbf{e}_1 \tag{v}$$

which gives a resultant force system

$$R_1 = \int T_{11}\,dA = \alpha \int dA + \beta \int x_2\,dA + \gamma \int x_3\,dA = \alpha A \tag{vi}$$

$$R_2 = R_3 = 0 \tag{vii}$$

$$M_1 = 0 \tag{viii}$$

$$\begin{aligned} M_2 &= \int x_3\,T_{11}\,dA = \alpha \int x_3\,dA + \beta \int x_2 x_3\,dA + \gamma \int x_3^2\,dA \\ &= \beta\, I_{23} + \gamma\, I_{22} \end{aligned} \tag{ix}$$

$$\begin{aligned} M_3 &= -\int x_2\,T_{11}\,dA = -\alpha \int x_2\,dA - \beta \int {x_2}^2\,dA - \gamma \int x_2 x_3\,dA \\ &= -\beta\, I_{33} - \gamma\, I_{23} \end{aligned} \tag{x}$$

where A is the cross-sectional area, I_{22}, I_{33}, and I_{23} are the moments and product of inertia of the cross-sectional area. On the face $x_1 = 0$, the resultant force system is equal and opposite to that given above.

we will set $\alpha = 0$ to make $R_1 = 0$ so that there is no axial forces acting at the end faces. We now assume, without any loss in generality, that we have chosen the x_2 and x_3 axis to coincide with the principal axes of the cross-sectional area (e.g., along lines of symmetry) so that $I_{23} = 0$. In this case, from Eqs. (ix) and (x), we have $\beta = -M_3/I_{33}$ and $\gamma = M_2/I_{22}$ so that the stress distribution for the cylindrical bar is given by

$$T_{11} = \frac{M_2}{I_{22}} x_3 - \frac{M_3}{I_{33}} x_2 \tag{5.15.1}$$

and all other $T_{ij} = 0$.

To investigate the nature of the deformation that is induced by bending moments, for simplicity we let $M_3 = 0$. The corresponding strains are

$$E_{11} = \frac{M_2}{I_{22}\,E_Y} x_3, \qquad E_{22} = E_{33} = -\frac{\nu\, M_2}{I_{22}\,E_Y} x_3 \tag{5.15.2a}$$

$$E_{12} = E_{13} = E_{23} = 0 \tag{5.15.2b}$$

These equations can be integrated (we are assured that this is possible since the strains are compatible) to give the following displacement field:

$$u_1 = \frac{M_2}{E_Y I_{22}} x_1 x_3 - \alpha_3 x_2 + \alpha_2 x_3 + \alpha_4 \tag{5.15.3a}$$

$$u_2 = -\nu \frac{M_2}{E_Y I_{22}} x_2 x_3 + \alpha_3 x_1 - \alpha_1 x_3 + \alpha_5 \tag{5.15.3b}$$

$$u_3 = -\frac{M_2}{2E_Y I_{22}} [x_1^2 - \nu (x_2^2 - x_3^2)] - \alpha_2 x_1 + \alpha_1 x_2 + \alpha_6 \tag{5.15.3c}$$

where α_i are constants of integration. In fact, α_4, α_5, α_6 define an overall rigid body translation of the bar and α_1, α_2, α_3 being constant parts of the antisymmetric part of the displacement gradient, define an overall small rigid body rotation. For convenience, we let all the $\alpha_i = 0$ [note that this corresponds to requiring $\mathbf{u} = \mathbf{0}$ and $(\nabla u)^A = \mathbf{0}$ at the origin]. The displacements are therefore,

$$u_1 = \frac{M_2}{E_Y I_{22}} x_1 x_3, \quad u_2 = -\frac{\nu M_2}{E_Y I_{22}} x_2 x_3 \tag{5.15.4a}$$

$$u_3 = -\frac{M_2}{2E_Y I_{22}} [x_1^2 - \nu (x_2^2 - x_3^2)] \tag{5.15.4b}$$

Considering the cross-sectional plane x_1 = constant, we note that the displacement perpendicular to the plane is given by

$$u_1 = \left(\frac{M_2 x_1}{E_Y I_{22}} \right) x_3 \tag{5.15.5}$$

Since u_1 is a linear function of x_3, the cross-sectional plane remains plane and is rotated about the x_2 axis (see Fig. 5.14) by an angle

$$\theta \approx \tan\theta = \frac{u_1}{x_3} = \frac{M_2 x_1}{E_Y I_{22}} \tag{5.15.6}$$

In addition, consider the displacement of the material that is initially along the x_1 axis ($x_2 = x_3 = 0$)

$$u_1 = u_2 = 0, \quad u_3 = -\frac{M_2 x_1^2}{2E_Y I_{22}} \tag{5.15.7}$$

The displacement of this material element (often called the neutral axis or neutral fiber) is frequently used to define the deflection of the beam. Note that since

$$-\frac{du_3}{dx_1} = \frac{M_2 x_1}{E_Y I_{22}} = \tan\theta \tag{5.15.8}$$

the cross-sectional planes remain perpendicular to the neutral axis. This is a result of the absence of shearing stress in pure bending.

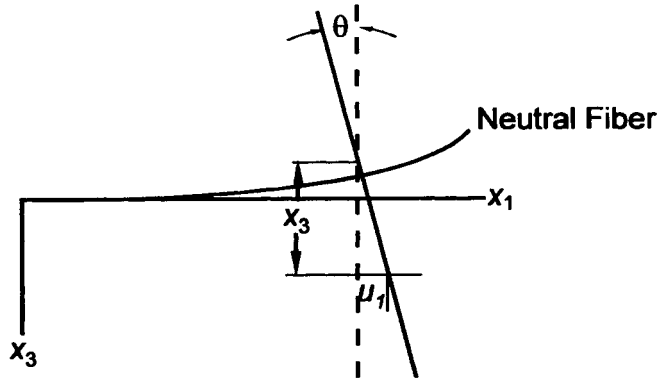

Fig. 5.14

Example 5.15.1

Figure 5.15 shows the right end face of a rectangular beam of width 15 cm and height 20 cm. The beam is subjected to pure bending couples at its ends. The right-hand couple is given as $\mathbf{M} = 7000\mathbf{e}_2$ Nm. Find the greatest normal and shearing stresses throughout the beam.

Solution. We have

$$T_{11} = \frac{M_2 x_3}{I_{22}} \tag{i}$$

and the remaining stress components vanish. Therefore, at any point

$$(T_n)_{\max} = \frac{M_2 x_3}{I_{22}} \tag{ii}$$

and

$$(T_s)_{\max} = \frac{M_2 x_3}{2I_{22}} \tag{iii}$$

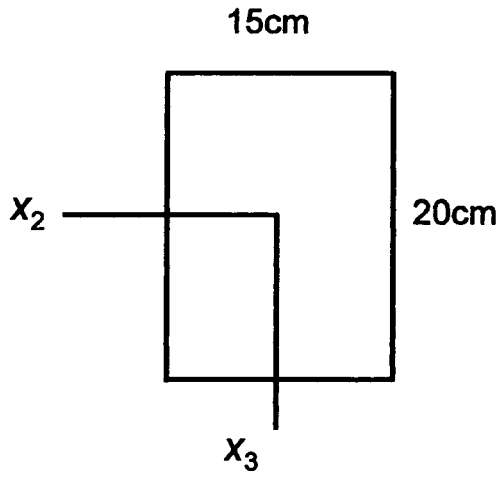

Fig. 5.15

The greatest value will be at the boundary, i.e., $x_3 = 10^{-1}$m. To obtain a numerical answer, we have

$$I_{22} = \frac{1}{12}(15\times10^{-2})(20\times10^{-2})^3 = 10^{-4}\ \text{m}^4$$

and the greatest stresses are

$$(T_n)_{\max} = \frac{(7000)(10^{-1})}{10^{-4}} = 7\times10^6\ \text{Pa.}$$

$$(T_s)_{\max} = 3.5\times10^6\ \text{Pa}$$

Example 5.15.2

For the beam of Example 5.15.1, if the right end couple is $M = 7000\ (\mathbf{e}_2 + \mathbf{e}_3)$Nm and the left end couple is equal and opposite, find the maximum normal stress.

Solution. We have

$$I_{33} = 0.563\times10^{-4}\ \text{m}^4,\quad I_{22} = 10^{-4}\ \text{m}^4$$

$$T_{11} = \frac{M_2 x_3}{I_{22}} - \frac{M_3 x_2}{I_{33}} = (70x_3 - 124\,x_2)\times10^6\text{Pa}$$

The maximum normal stress occurs at $x_2 = -7.5\times10^{-2}$ m and $x_3 = 10^{-1}$ m with

$$T_{11} = 16.3\ \text{MPa}$$

5.16 Plane Strain

If the deformation of a cylindrical body is such that there is no axial components of the displacement and that the other components do not depend on the axial coordinate, then the body is said to be in a state of plane strain. Such a state of strain exists for example in a cylindrical body whose end faces are prevented from moving axially and whose lateral surface are acted on by loads that are independent of the axial position and without axial components.

Letting the $\mathbf{e}_3$ direction correspond to the cylindrical axis, we have

$$u_1 = u_1(x_1, x_2), \quad u_2 = u_2(x_1, x_2), \quad u_3 = 0 \tag{5.16.1}$$

The strain components corresponding to this displacement field are:

$$E_{11} = \frac{\partial u_1}{\partial x_1}, \quad E_{22} = \frac{\partial u_2}{\partial x_2}, \quad E_{12} = \frac{1}{2}\left(\frac{\partial u_1}{\partial x_2} + \frac{\partial x_2}{\partial x_1}\right) \tag{5.16.2a}$$

$$E_{13} = E_{23} = E_{33} = 0 \tag{5.16.2b}$$

and the nonzero stress components are T_{11}, T_{12}, T_{22}, T_{33}, where

$$T_{33} = \nu(T_{11} + T_{22}) \tag{5.16.3}$$

This last equation is obtained from the Hooke's law, Eq. (5.4.8c) and the fact that $E_{33} = 0$ for the plane strain problem.

Considering a static stress field with no body forces, the equilibrium equations reduce to

$$\frac{\partial T_{11}}{\partial x_1} + \frac{\partial T_{12}}{\partial x_2} = 0. \tag{5.16.4a}$$

$$\frac{\partial T_{12}}{\partial x_1} + \frac{\partial T_{22}}{\partial x_2} = 0 \tag{5.16.4b}$$

$$\frac{\partial T_{33}}{\partial x_3} = 0 \tag{5.16.4c}$$

Because $T_{33} = T_{33}(x_1, x_2)$, the third equation is trivially satisfied. It can be easily verified that for any arbitrary scalar function φ, if we compute the stress components from the following equations

$$T_{11} = \frac{\partial^2 \varphi}{\partial x_2^2}, \quad T_{12} = -\frac{\partial^2 \varphi}{\partial x_1 \partial x_2}, \quad T_{22} = \frac{\partial^2 \varphi}{\partial x_1^2} \tag{5.16.5}$$

then the first two equations are automatically satisfied. However, not all stress components obtained this way are acceptable as a possible solution because the strain components derived from them may not be compatible; that is, there may not exist displacement components which

correspond to the strain components. To ensure the compatibility of the strain components, we obtain the strain components in terms of φ from Hooke's law Eqs. (5.4.8) [and using Eq. (5.16.3)]

$$E_{11} = \frac{1}{E_Y}[(1-\nu^2)T_{11} - \nu(1+\nu)T_{22}] = \frac{1}{E_Y}[(1-\nu^2)\frac{\partial^2\varphi}{\partial x_2^2} - \nu(1+\nu)\frac{\partial^2\varphi}{\partial x_1^2}] \tag{5.16.6a}$$

$$E_{22} = \frac{1}{E_Y}[(1-\nu^2)T_{22} - \nu(1+\nu)T_{11}] = \frac{1}{E_Y}[(1-\nu^2)\frac{\partial^2\varphi}{\partial x_1^2} - \nu(1+\nu)\frac{\partial^2\varphi}{\partial x_2^2}] \tag{5.16.6b}$$

$$E_{12} = \frac{1}{E_Y}(1+\nu)T_{12} = -\frac{1}{E_Y}(1+\nu)\frac{\partial^2\varphi}{\partial x_1\,\partial x_2} \tag{5.16.6c}$$

$$E_{13} = E_{23} = E_{33} = 0 \tag{5.16.d}$$

and substitute them into the compatibility equations, Eqs. (3.16.7) to (3.16.12). For plane strain problems, the only compatibility equation that is not automatically satisfied is

$$\frac{\partial^2 E_{11}}{\partial x_2^2} + \frac{\partial^2 E_{22}}{\partial x_1^2} = 2\frac{\partial^2 E_{12}}{\partial x_1\,\partial x_2} \tag{5.16.7}$$

Thus, we obtain the following equation governing the scalar function φ:

$$(1-\nu)\left(\frac{\partial^4\varphi}{\partial x_1^4} + 2\frac{\partial^4\varphi}{\partial x_1^2\,\partial x_2^2} + \frac{\partial^4\varphi}{\partial x_2^4}\right) = 0$$

i.e.,

$$\frac{\partial^4\varphi}{\partial x_1^4} + 2\frac{\partial^4\varphi}{\partial x_1^2\,\partial x_2^2} + \frac{\partial^4\varphi}{\partial x_2^4} = 0 \tag{5.16.8}$$

Any function φ which satisfies Eq. (5.16.8) generates a possible elastic solution. In particular, any third degree polynomial (generating a linear stress and strain field) may be utilized. The stress function φ defined by Eqs. (5.16.5) and satisfying Eq. (5.16.8), is called the **Airy Stress Function.**

We can also obtain from the Hooke's law [Eq. (5.16.6)], the compatibility equation [Eq. (5.16.7)] and the equations of equilibrium [Eqs. (5.16.4)] the following : [See Prob. 5.77]

$$\left(\frac{\partial^2}{\partial x_1^2} + \frac{\partial^2}{\partial x_2^2}\right)(T_{11} + T_{22}) = 0 \tag{5.16.9}$$

which may also be written as

$$\nabla^2(T_{11} + T_{22}) = 0 \tag{5.16.10}$$

where

$$\nabla^2 = \frac{\partial^2}{\partial x_1^2} + \frac{\partial^2}{\partial x_2^2} \tag{iiic}$$

Example 5.16.1

Consider the Airy stress function

$$\varphi(x_1, x_2) = \frac{\beta}{6} x_2^3 \tag{i}$$

(a) Obtain the stresses for the state of plane strain;

(b) If the stresses of part(a) are those inside a rectangular bar bounded by $x_1 = 0$, $x_1 = l$, $x_2 = \pm(h/2)$ and $x_3 = \pm(b/2)$, find the surface tractions on the boundaries

(c) If the boundary surfaces $x_3 = \pm(b/2)$ are traction-free, find the solution.

Solution. (a) From Eq. (5.16.5)

$$T_{11} = \beta x_2, \quad T_{22} = 0, \quad T_{33} = \nu \beta x_2 \tag{iia}$$

$$T_{12} = T_{13} = T_{23} = 0 \tag{iib}$$

that is,

$$[\mathbf{T}] = \begin{bmatrix} \beta x_2 & 0 & 0 \\ 0 & 0 & 0 \\ 0 & 0 & \nu \beta x_2 \end{bmatrix} \tag{iic}$$

(b) On the face $x_1 = 0$, $\mathbf{t} = \mathbf{T}(-\mathbf{e}_1) = -\beta x_2 \mathbf{e}_1$ (iiia)

On the face $x_1 = l$, $\mathbf{t} = \mathbf{T}(\mathbf{e}_1) = \beta x_2 \mathbf{e}_1$ (iiib)

On the faces $x_2 = \pm(h/2)$, $\mathbf{t} = \mathbf{T}(\pm\mathbf{e}_2) = 0$ (iiic)

On the faces $x_3 = \pm(b/2)$, $\mathbf{t} = \mathbf{T}(\pm\mathbf{e}_3) = \pm\nu\beta x_2 \mathbf{e}_3$ (iiid)

We note that the surface normal stress on the side faces $x_3 = \pm(b/2)$are required to prevent them from moving in thex_3 direction.

(c) In order to obtain the solution for the case where the side faces $x_3 = \pm(b/2)$ are traction -free (and therefore have non zero u_3), it is necessary to remove the normal stresses from these side faces. Let us consider the following state of stress

$$[\mathbf{T}] = \begin{bmatrix} 0 & 0 & 0 \\ 0 & 0 & 0 \\ 0 & 0 & -\nu\beta x_2 \end{bmatrix} \tag{iv}$$

This state of stress is obviously a possible state of stress because it clearly satisfies the equations of equilibrium in the absence of body forces and the stress components, being linear in x_2, give rise to strain components that are also linear in x_2 so that the compatibility conditions are also satisfied. Superposing this state of stress to that of part (a), that is, adding Eq. (iic) and Eq. (iv) we obtain

$$[\mathbf{T}] = \begin{bmatrix} \beta x_2 & 0 & 0 \\ 0 & 0 & 0 \\ 0 & 0 & 0 \end{bmatrix} \tag{v}$$

We note that this is the exact solution for pure bending of the bar with couple vectors parallel to the direction of $\mathbf{e}_3$.

In this example, we have easily obtained, from the plane strain solution where the side faces $x_3 = \pm (b/2)$ of the rectangular bar are prevented from moving normally, the state of stress for the same rectangular bar where the side faces are traction-free, by simply removing the component T_{33} of the plane strain solution. This is possible for this problem because the T_{33} obtained in the plane strain solution of part (a) happens to be a linear function of the coordinates.

Example 5.16.2

Consider the state of stress given by

$$[\mathbf{T}] = \begin{bmatrix} 0 & 0 & 0 \\ 0 & 0 & 0 \\ 0 & 0 & G(x_1, x_2) \end{bmatrix} \tag{i}$$

Show that the most general form of $G(x_1, x_2)$ which gives rise to a possible state of stress in the absence of body force is

$$G(x_1, x_2) = \alpha x_1 + \beta x_2 + \gamma. \tag{ii}$$

Solution. The strain components are

$$E_{11} = -\frac{\nu}{E_Y} G(x_1, x_2) = E_{22} \tag{iiia}$$

$$E_{33} = \frac{1}{E_Y} G(x_1, x_2) \tag{iiib}$$

$$E_{12} = E_{13} = E_{23} = 0 \tag{iiic}$$

From the compatibility equations, Eqs. (3.16.8), (3.16.9) and (3.16.7), we have

$$\frac{\partial^2 G}{\partial x_2^2} = 0\,, \quad \frac{\partial^2 G}{\partial x_1^2} = 0\,, \quad \frac{\partial^2 G}{\partial x_1\, \partial x_2} = 0 \tag{iv}$$

Thus, $G(x_1, x_2) = \alpha x_1 + \beta x_2 + \gamma$. In the absence of body forces, the equations of equilibrium are obviously satisfied.

Example 5.16.3

Consider the stress function $\varphi = \alpha x_1 x_2^3 + \beta x_1 x_2$

(a) Is this an allowable stress function?

(b) Determine the associated stresses for the plane strain case.

(c) Determine α and β in order to solve the plane strain problem of a cantilever beam with end load P (Fig. 5.16).

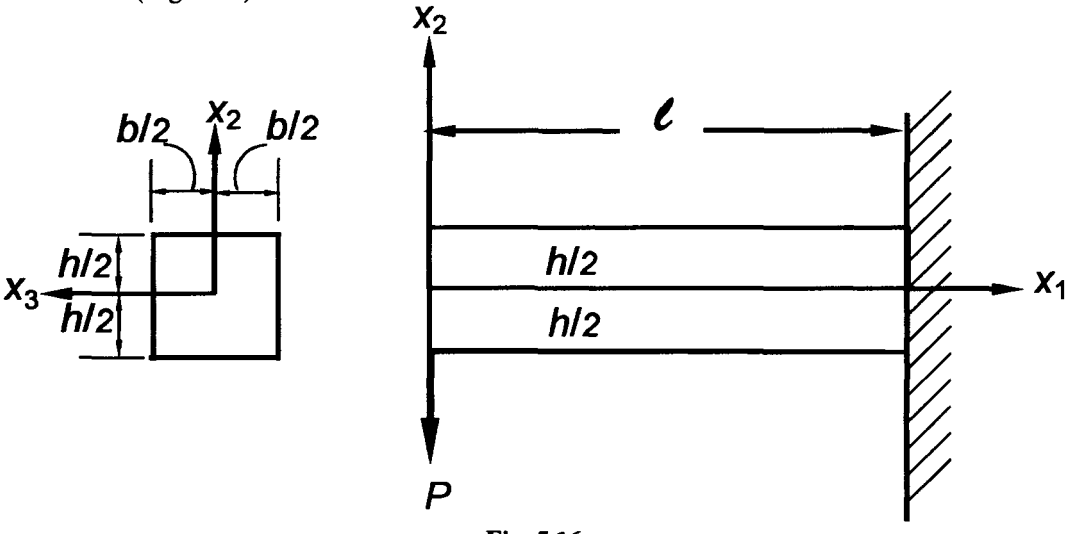

Fig. 5.16

(d) If the faces $x_3 = \pm b/2$ are traction-free, are the stress components given in (b) still valid for this case if we simply remove T_{33} from them ?

Solution. (a) Yes, because the stress function satisfies Eq. (5.16.8) exactly.

(b) The stress components are

$$T_{11} = \frac{\partial^2 \varphi}{\partial x_2^2} = 6\alpha\, x_1 x_2\,,\; T_{22} = \frac{\partial^2 \varphi}{\partial x_1^2} = 0,\; T_{12} = -\frac{\partial^2 \varphi}{\partial x_1 \partial x_2} = -\beta - 3\,\alpha\, x_2^2 \tag{i}$$

i.e., for the plane strain problem

$$[\mathbf{T}] = \begin{bmatrix} 6\,\alpha x_1 x_2 & -\beta - 3\,\alpha\, x_2^2 & 0 \\ -\beta - 3\,\alpha\, x_2^2 & 0 & 0 \\ 0 & 0 & -6\,\nu\,\alpha x_1 x_2 \end{bmatrix} \tag{ii}$$

(c) On the boundaries, $x_2 = \pm h/2$, the tractions are

$$\mathbf{t} = \pm(T_{22}\mathbf{e}_2 + T_{12}\mathbf{e}_1) = \pm(-\beta - \frac{3\alpha\, h^2}{4})\,\mathbf{e}_1 \tag{iii}$$

But, we wish the lateral surface ($x_2 = \pm h/2$) to be traction-free, therefore

$$\beta = -\frac{3\,h^2}{4}\alpha \tag{iv}$$

On the boundary $x_1 = 0$,

$$\mathbf{t} = -\mathbf{T}\mathbf{e}_1 = (\beta + 3\,\alpha\, x_2^2)\mathbf{e}_2 \tag{v}$$

This shearing traction can be made equipollent to an applied load $P\mathbf{e}_2$ by setting

$$-P = \beta \int dA + 3\,\alpha \int x_2^2\, dA = \beta A + 3\,\alpha\, I$$

where $A = b\,h$ and $I = b\,h^3/12$. Substituting for β, we have

$$P = \alpha\left(\frac{3}{4} b\,h^3 - \frac{b\,h^3}{4}\right) = \left(\frac{b\,h^3}{2}\right)\alpha$$

Therefore, $\alpha = 2P/bh^3$, $\beta = -3P/2bh$ and the stresses are

$$T_{11} = \frac{12P}{b\,h^3} x_1 x_2 = \frac{P}{I} x_1 x_2$$

$$T_{12} = \frac{3P}{2A} - \frac{P}{2I} x_2^2$$

In order that the state of plane strain is achieved, it is necessary to have normal tractions acting on the side faces $x_3 = \pm b/2$. The tractions are in fact $\mathbf{t} = \pm T_{33}\mathbf{e}_3 = \pm 6\,\nu\,\alpha\, x_1 x_2\, \mathbf{e}_2$.

(d) Since T_{33} is not a linear function of the coordinates x_1 and x_2, from example 5.16.2, we see that we cannot simply remove T_{33} from the plane strain solution to arrive at a the stress

state for the beam where the side faces $x_3 = \pm b/2$ are traction free. However, if b is very very small, then it seems reasonable to expect that the application of $-T_{33}$ on these side face alone will result in a state of stress inside the body which is essentially given by

$$[\mathbf{T}] = \begin{bmatrix} 0 & 0 & 0 \\ 0 & 0 & 0 \\ 0 & 0 & -T_{33} \end{bmatrix} \tag{iv}$$

(Indeed it can be proved that the errors incurred in this equation approach zero with the second power of b as b approaches zero). Thus, the state of stress obtained in part (b), with T_{33} taken to be zero, is the state of stress inside a thin beam under the same external loading as that in the plane strain case. Such a state of stress is known as the state of **plane stress** where the stress matrix given by

$$[\mathbf{T}] = \begin{bmatrix} T_{11} & T_{12} & 0 \\ T_{12} & T_{22} & 0 \\ 0 & 0 & 0 \end{bmatrix} \tag{5.16.11}$$

The strain field corresponding to the plane stress state is given by

$$E_{11} = \frac{1}{E_Y}[T_{11} - \nu T_{22}], \quad E_{22} = \frac{1}{E_Y}[T_{22} - \nu T_{11}], \quad E_{33} = -\frac{\nu}{E_Y}(T_{11} + T_{22})$$

$$E_{12} = \frac{1}{E_Y}(1 + \nu)T_{12}, \quad E_{13} = E_{23} = 0 \tag{5.16.12}$$

5.17 Plane Strain Problem in Polar Coordinates

In Polar coordinates, the strain components in plane strain problem are, [with $T_{zz} = \nu(T_{rr} + T_{\theta\theta})$],

$$E_{rr} = \frac{1}{E_Y}[(1 - \nu^2)T_{rr} - \nu(1 + \nu)T_{\theta\theta}]$$

$$E_{\theta\theta} = \frac{1}{E_Y}[(1 - \nu^2)T_{\theta\theta} - \nu(1 + \nu)T_{rr}]$$

$$E_{r\theta} = \frac{(1 + \nu)}{E_Y}T_{r\theta}$$

$$E_{rz} = E_{\theta z} = E_{zz} = 0 \tag{5.17.1}$$

The equations of equilibrium are [see Eqs. (4.8.1)], (noting that there is no z dependence).

$$\frac{1}{r}\frac{\partial(r\,T_{rr})}{\partial r} + \frac{1}{r}\frac{\partial T_{r\theta}}{\partial \theta} - \frac{T_{\theta\theta}}{r} = 0 \tag{5.17.2a}$$

$$\frac{1}{r^2}\frac{\partial(r^2 T_{\theta r})}{\partial r} + \frac{1}{r}\frac{\partial T_{\theta\theta}}{\partial \theta} = 0 \tag{5.17.2b}$$

The third equation is automatically satisfied, because $T_{z\theta} = T_{rz} = 0$ and T_{zz} is not a function of z.

It can be easily verified that the equations of equilibrium Eq. (5.17.2a) are identically satisfied if

$$T_{rr} = \frac{1}{r}\frac{\partial \varphi}{\partial r} + \frac{1}{r^2}\frac{\partial^2 \varphi}{\partial \theta^2} \tag{5.17.3a}$$

$$T_{\theta\theta} = \frac{\partial^2 \varphi}{\partial r^2} \tag{5.17.3b}$$

$$T_{r\theta} = -\frac{\partial}{\partial r}\left(\frac{1}{r}\frac{\partial \varphi}{\partial \theta}\right) \tag{5.17.3c}$$

where φ is the Airy stress function. In Section 5.16, we see that in order to satisfy the compatibility conditions, the Cartesian stress components $T_{11} + T_{22}$ must satisfy Eq. (5.16.9), i.e.,

$$\left(\frac{\partial^2}{\partial x_1^2} + \frac{\partial^2}{\partial x_2^2}\right)(T_{11} + T_{22}) = 0 \tag{5.17.4}$$

To derive the equivalent expression in cylindrical coordinates, we note that $T_{11} + T_{22}$ is the first scalar invariant of the stress tensor. Therefore

$$T_{11} + T_{22} = T_{rr} + T_{\theta\theta} = \frac{1}{r}\frac{\partial \varphi}{\partial r} + \frac{1}{r^2}\frac{\partial^2 \varphi}{\partial \theta^2} + \frac{\partial^2 \varphi}{\partial r^2} \tag{5.17.5}$$

Also, the Laplacian operator $\nabla^2 = (\partial^2/\partial x_1^2 + \partial^2/\partial x_2^2)$ takes the following form in polar coordinates

$$\nabla^2 = \frac{\partial^2}{\partial r^2} + \frac{1}{r}\frac{\partial}{\partial r} + \frac{1}{r^2}\frac{\partial^2}{\partial \theta^2}$$

Thus, the function φ must satisfy the biharmonic equation

$$\left(\frac{\partial^2}{\partial r^2} + \frac{1}{r}\frac{\partial}{\partial r} + \frac{1}{r^2}\frac{\partial^2}{\partial \theta^2}\right)\left(\frac{\partial^2 \varphi}{\partial r^2} + \frac{1}{r}\frac{\partial \varphi}{\partial r} + \frac{1}{r^2}\frac{\partial^2 \varphi}{\partial \theta^2}\right) = 0 \tag{5.17.6}$$

If φ is a function of r only, we have,

$$T_{rr} = \frac{1}{r}\frac{d\varphi}{\partial r}, \quad T_{\theta\theta} = \frac{d^2\varphi}{dr^2}, \quad T_{r\theta} = 0 \tag{5.17.7}$$

and

$$\frac{d^4\varphi}{dr^4} + \frac{2}{r}\frac{d^3\varphi}{dr^3} - \frac{1}{r^2}\frac{d^2\varphi}{dr^2} + \frac{1}{r^3}\frac{d\varphi}{dr} = 0 \tag{5.17.8}$$

The general solution of this equation is [See Prob. 5.78]

$$\varphi = A\ln r + Br^2 \ln r + Cr^2 + D \tag{5.17.9}$$

The stress field corresponding to this stress function is

$$T_{rr} = \frac{A}{r^2} + B(1 + 2\ln r) + 2C \tag{5.17.10a}$$

$$T_{\theta\theta} = -\frac{A}{r^2} + B(3 + 2\ln r) + 2C \tag{5.17.10b}$$

$$T_{r\theta} = 0 \tag{5.17.10c}$$

and the strain components are:

$$E_{rr} = \frac{1}{E_Y}\left[\frac{(1+\nu)A}{r^2} + (1-3\nu-4\nu^2)B + 2(1-\nu-2\nu^2)B\ln r + 2(1-\nu-2\nu^2)C\right] \tag{5.17.11a}$$

$$E_{\theta\theta} = \frac{1}{E_Y}\left[-\frac{(1+\nu)A}{r^2} + (3-\nu-4\nu^2)B + 2(1-\nu-2\nu^2)B\ln r + 2(1-\nu-2\nu^2)C\right] \tag{5.17.11b}$$

$$E_{r\theta} = 0 \tag{5.17.11c}$$

Since

$$E_{rr} = \frac{\partial u_r}{\partial r}, \quad E_{\theta\theta} = \frac{1}{r}\frac{\partial u_\theta}{\partial \theta} + \frac{u_r}{r} \tag{5.17.12a}$$

$$E_{r\theta} = \frac{1}{2}\left(\frac{1}{r}\frac{\partial u_r}{\partial \theta} + \frac{\partial u_\theta}{\partial r} - \frac{u_\theta}{r}\right) \tag{5.17.12b}$$

the displacement components can be obtained by integrating the above equations. They are [See Prob. 5.79], (ignoring the terms that represent rigid body displacements)

$$u_r = \frac{1}{E_Y}\left[-\frac{(1+\nu)A}{r} - B(1+\nu)r + 2B(1-\nu-2\nu^2)r\ln r + 2C(1-\nu-2\nu^2)r\right] \tag{5.17.13a}$$

$$u_\theta = \frac{4B\,r\,\theta}{E_Y}(1-\nu^2) \tag{5.17.13b}$$

5.18 Thick-walled Circular Cylinder under Internal and External Pressure

Consider a circular cylinder subjected to the action of an internal pressure p_i and an external pressure p_o. The boundary conditions for the plane strain problem are:

$$T_{rr} = -p_i \quad \text{at } r = a \tag{5.18.1a}$$

$$T_{rr} = -p_o \quad \text{at } r = b \tag{5.18.1b}$$

These boundary conditions can be easily shown to be satisfied by the following stress field

$$T_{rr} = \frac{A}{r^2} + 2C, \quad T_{\theta\theta} = -\frac{A}{r^2} + 2C, \quad T_{r\theta} = 0 \tag{5.18.2}$$

These components of stress are taken from Eq. (5.17.10) with $B = 0$ and represent therefore, a possible state of stress for the plane strain problem, where $T_{zz} = \nu\,(T_{rr} + T_{\theta\theta})$. We note that if B is not taken to be zero, then $u_\theta = \frac{4Br\,\theta}{E_Y}(1-\nu^2)$ which is not acceptable because if we start from a point at $\theta = 0$, trace a circuit around the origin and return to the same point, θ becomes 2π and the displacement at the point takes on a different value. Now applying the boundary conditions given in Eqs. (5.18.1), we find that

$$T_{rr} = -p_i\frac{(b^2/r^2)-1}{(b^2/a^2)-1} - p_o\frac{1-(a^2/r^2)}{1-(a^2/b^2)} \tag{5.18.3a}$$

$$T_{\theta\theta} = p_i\frac{(b^2/r^2)+1}{(b^2/a^2)-1} - p_o\frac{1+(a^2/r^2)}{1-(a^2/b^2)} \tag{5.18.3b}$$

$$T_{r\theta} = 0 \tag{5.18.3c}$$

We note that if only the internal pressure p_i is acting, T_{rr} is always a compressive stress and $T_{\theta\theta}$ is always a tensile stress.

The above stress components together with $T_{zz} = \nu\,(T_{rr} + T_{\theta\theta})$ constitute the exact plane strain solution for the cylinder whose axial end faces are fixed.

As discussed in the last section, the state of stress given by Eqs. (5.18.3) above and with $T_{zz} = 0$, can also be regarded as an approximation to the problem of a cylinder which is very thin in the axial direction, under the action of internal and external pressure with traction-free end faces. However, the strain field is not given by Eq. (5.17.11), which is for the plane strain case. For the plane stress case,

$$E_{rr} = \frac{1}{E_Y}(T_{rr} - \nu\, T_{\theta\theta}), \quad E_{\theta\theta} = \frac{1}{E_Y}(T_{\theta\theta} - \nu\, T_{rr}) \tag{5.18.4b}$$

$$E_{zz} = \frac{\nu}{E_Y}(T_{rr} + T_{\theta\theta}), \quad E_{r\theta} = \frac{(1+\nu)}{E_Y}\, T_{r\theta} \tag{5.18.4c}$$

Example 5.18.1

Consider a thick-wall cylinder subjected to the action of external pressure p_o only. If the outer radius is much much larger than the inner radius. What is the stress field?

Solution. From Eqs. (5.18.3), we have

$$T_{rr} = -p_o \frac{1-(a^2/r^2)}{1-(a^2/b^2)}$$

$$T_{\theta\theta} = -p_o \frac{1+(a^2/r^2)}{1-(a^2/b^2)}$$

$$T_{r\theta} = 0$$

When b is much much larger than a, these become

$$T_{rr} = -p_o[1-(a^2/r^2)] \tag{5.18.5a}$$

$$T_{\theta\theta} = -p_o[1+(a^2/r^2)] \tag{5.18.5b}$$

$$T_{r\theta} = 0 \tag{5.18.5c}$$

5.19 Pure Bending of a Curved Beam

Fig. 5.17 shows a curved beam whose boundary surfaces are given by $r = a, r = b$, $\theta = \pm\alpha$ and $z = \pm h/2$. The boundary surface $r = a, r = b$ and $z = \pm h/2$ are traction-free. Assuming the dimension h is very small compared with the other dimensions., we wish to obtain a plane stress solution for this curved beam under the action of equal and opposite bending couples acting on the faces $\theta = \pm\alpha$.

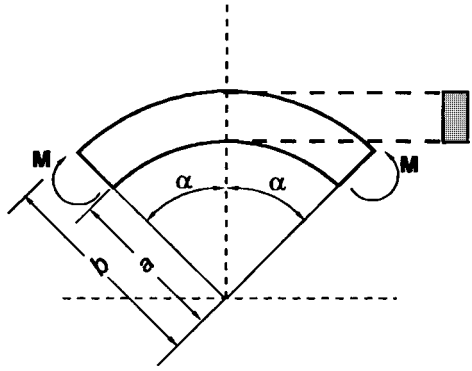

Fig. 5.17

In the following we shall show that the state of stresses given in Eqs. (5.17.10) together with $T_{zz} = 0$ can be used to give the desired solution. The stress components are:

$$T_{rr} = \frac{A}{r^2} + B(1 + 2\ln r) + 2C \tag{5.19.1a}$$

$$T_{\theta\theta} = \frac{-A}{r^2} + B(3 + 2\ln r) + 2C \tag{5.19.1b}$$

$$T_{r\theta} = 0 \tag{5.19.1c}$$

Since the surfaces $r = a$ and $r = b$ are traction-free, the constants A, B and C must satisfy

$$0 = \frac{A}{a^2} + B(1 + 2\ln a) + 2C \tag{5.19.2a}$$

$$0 = \frac{A}{b^2} + B(1 + 2\ln b) + 2C \tag{5.19.2b}$$

On the face $\theta = \alpha$, there is a distribution of normal stress $T_{\theta\theta}$ given by Eq. (5.19.1b). Let us compute the resultant of this distribution of the normal stresses:

$$R = \int_a^b T_{\theta\theta} h\, dr = h\left[\frac{A}{r} + B(r + 2r\ln r) + 2Cr\right]_a^b \tag{5.19.3}$$

In view of Eqs. (5.19.2), we have

$$R = 0$$

That is, the resultant of the distribution of normal stresses must be a couple. Let the moment of this couple per unit width be M as shown in Fig. 5.17, then

$$-M = \int_a^b T_{\theta\theta}\, r\, dr$$

i.e.,

$$-M = \left[-A \ln\frac{b}{a} + B(b^2 - a^2) + B(b^2 \ln b - a^2 \ln a) + C(b^2 - a^2)\right] \tag{5.19.4a}$$

In view of Eqs. (5.19.2), Eq. (5.19.4) can also be written as [see Prob. 5.80]

$$-M = \left[-A \ln\frac{b}{a} - B(b^2 \ln b - a^2 \ln a) - C(b^2 - a^2)\right] \tag{5.19.4b}$$

Equations (5.19.2a) (5.19.2b) and (5.19.4) are three equations for the three constants A,B and C. We obtain,

$$A = -\frac{4M}{N} a^2 b^2 \ln\frac{b}{a} \qquad B = -\frac{2M}{N}(b^2 - a^2) \tag{5.19.5a}$$

$$C = \frac{M}{N}[b^2 - a^2 + 2(b^2 \ln b - a^2 \ln a)] \tag{5.19.5b}$$

where

$$N = (b^2 - a^2)^2 - 4a^2b^2 \left(\ln\frac{b}{a}\right)^2 \tag{5.19.5c}$$

Thus

$$T_{rr} = -\frac{4M}{N}\left(\frac{a^2 b^2}{r^2} \ln\frac{b}{a} + b^2 \ln\frac{r}{b} + a^2 \ln\frac{a}{r}\right) \tag{5.19.6a}$$

$$T_{\theta\theta} = -\frac{4M}{N}\left(\frac{-a^2b^2}{r^2} \ln\frac{b}{a} + b^2 \ln\frac{r}{b} + a^2 \ln\frac{a}{r} + b^2 - a^2\right) \tag{5.19.6b}$$

$$T_{r\theta} = 0 \tag{5.19.6c}$$

5.20 Stress Concentration due to a Small Circular Hole in a Plate under Tension

Fig. 5.18 shows a plate with a small circular hole of radius a subjected to the actions of uniform tensile stress of magnitude σ on the faces perpendicular to the x direction. Let us

consider the region between two concentric circles: $r = a$ and $r = b$. The surface $r = a$ is traction-free, i.e.,

$$T_{rr} = 0\,,\ T_{r\theta} = 0 \quad \text{at r = a.} \tag{i}$$

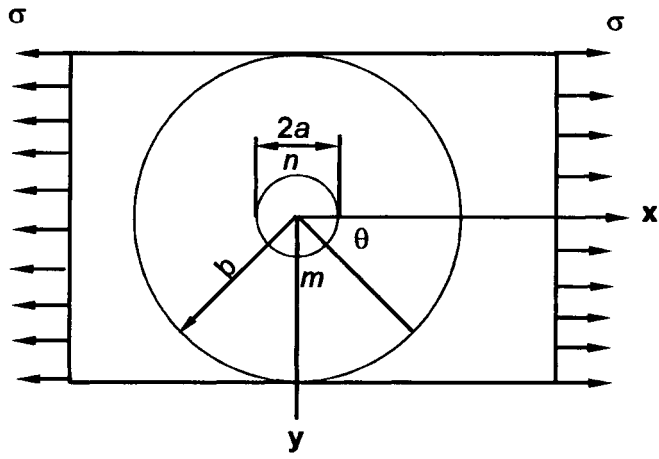

Fig. 5.18

If b is much larger than a, then the effect of the small hole will be negligible on points lying on the surface $r = b$ so that the state of stress at $r = b$ as $a/b \to 0$ will be that due to the uniaxial tensile stress σ in the absence of the hole. In Cartesian coordinates, this state of stress is $T_{11} = \sigma$ with all other stress components zero. In cylindrical coordinates this same state of stress has the following nonzero stress components

$$T_{rr} = \frac{\sigma}{2} + \frac{\sigma}{2}\cos 2\theta,\ T_{\theta\theta} = \frac{\sigma}{2} - \frac{\sigma}{2}\cos 2\theta,\ T_{r\theta} = -\frac{\sigma}{2}\sin 2\theta \tag{5.20.1}$$

Thus, the stress vector acting on the surface $r = b$ has the r-component and θ−component given by

$$T_{rr} = \frac{\sigma}{2} + \frac{\sigma}{2}\cos 2\theta \tag{5.20.2a}$$

and

$$T_{r\theta} = -\frac{\sigma}{2}\sin 2\theta \tag{5.20.2b}$$

Therefore, the solution to the problem at hand can be obtained as follows: Find the elastostatically possible equilibrium plane stress field which satisfies the boundary conditions: (i) at

$r = b\ (>>a)$, T_{rr} is given by Eq. (5.20.2a) and $T_{r\theta}$ is given by Eq. (5.20.2b) and (ii) at $r = a$ $T_{rr} = T_{r\theta} = 0$.

First, we shall demonstrate that the stress field generated from the Airy stress function in the form of $\varphi = f(r)\cos 2\theta$, can be used to give a stress field which satisfies the boundary conditions

$$\text{at } r = b, \qquad T_{rr} = \frac{\sigma}{2}\cos 2\theta\,, \quad T_{r\theta} = -\frac{\sigma}{2}\sin 2\theta \tag{5.20.3a}$$

$$\text{at } r = a, \qquad T_{rr} = 0, \quad T_{r\theta} = 0 \tag{5.20.3b}$$

Then, to this stress field, we will superpose the stress field

$$T_{rr} = \frac{\sigma}{2}\left(1-\frac{a^2}{r^2}\right) \qquad T_{\theta\theta} = \frac{\sigma}{2}\left(1+\frac{a^2}{r^2}\right) \qquad T_{r\theta} = 0 \tag{5.20.4}$$

which is the solution for a hollow cylinder with a very thick wall (i.e.,$b/a \to \infty$), acted on by a uniform radial traction $\frac{\sigma}{2}$ on the outer surface $r=b$ only [see Eqs. (5.18.5) in Example 5.18.1]. In this way, the boundary conditions Eqs. (5.20.2) can be satisfied..

Substituting

$$\varphi = f(r)\cos 2\theta \tag{5.20.5}$$

into the equation governing the Airy's stress function, Eq. (5.17.6), i.e.,

$$\left(\frac{\partial^2}{\partial r^2} + \frac{1}{r}\frac{\partial}{\partial r} + \frac{1}{r^2}\frac{\partial^2}{\partial \theta^2}\right)\left(\frac{\partial^2}{\partial r^2} + \frac{1}{r}\frac{\partial}{\partial r} + \frac{1}{r^2}\frac{\partial^2}{\partial \theta^2}\right)\varphi = 0$$

we obtain that the function f(r) must satisfy the following equation

$$\left(\frac{d^2}{dr^2} + \frac{1}{r}\frac{d}{dr} - \frac{4}{r^2}\right)\left(\frac{d^2 f}{dr^2} + \frac{1}{r}\frac{df}{dr} - \frac{4f}{r^2}\right) = 0 \tag{5.20.6}$$

The general solution for this equation is [see Prob. 5.81]

$$f(r) = A r^2 + B r^4 + C\frac{1}{r^2} + D \tag{5.20.7}$$

Thus,

$$\varphi = \left(A r^2 + B r^4 + C\frac{1}{r^2} + D\right)\cos 2\theta \tag{5.20.8}$$

and the corresponding stress components are [see Eqs. (5.17.3)]

$$T_{rr} = -\left(2A + \frac{6C}{r^4} + \frac{4D}{r^2}\right)\cos 2\theta \tag{5.20.9a}$$

$$T_{\theta\theta} = \left(2A + 12Br^2 + \frac{6C}{r^4}\right)\cos 2\theta \tag{5.20.9b}$$

$$T_{r\theta} = \left(2A + 6Br^2 - \frac{6C}{r^4} + \frac{2D}{r^2}\right)\sin 2\theta \tag{5.20.9c}$$

Using Eqs. (5.20.9), the boundary conditions (5.20.3) become

$$2A + \frac{6C}{b^4} + \frac{4D}{b^2} = -\frac{\sigma}{2} \tag{5.20.10a}$$

$$2A + 6Bb^2 - \frac{6C}{b^4} - \frac{2D}{b^2} = -\frac{\sigma}{2} \tag{5.20.10b}$$

$$2A + \frac{6C}{a^4} + \frac{4D}{a^2} = 0 \tag{5.20.10c}$$

$$2A + 6Ba^2 - \frac{6C}{a^4} - \frac{2D}{a^2} = 0 \tag{5.20.10d}$$

As $b \to \infty$, Eq. (5.20.10a) becomes $2A = -\frac{\sigma}{2}$, so that $A = -\frac{\sigma}{4}$, Eq. (5.20.10b) becomes $6B\,b^2 = 0$ so that$B = 0$ and Eqs. (5.20.10 c) and (d) become

$$-\frac{\sigma}{2} + \frac{6C}{a^4} + \frac{4D}{a^2} = 0$$

$$-\frac{\sigma}{2} - \frac{6C}{a^4} - \frac{2D}{a^2} = 0$$

Thus,

$$A = -\frac{\sigma}{4},\ \ B = 0,\ \ C = -\frac{a^4}{4}\sigma,\ \ D = \frac{a^2}{2}\sigma \tag{5.20.11}$$

Substituting these values into Eqs. (5.20.9) and superpose them onto the stress field given in Eq. (5.20.4), we obtain

$$T_{rr} = \frac{\sigma}{2}\left(1 - \frac{a^2}{r^2}\right) + \frac{\sigma}{2}\left(1 + \frac{3a^4}{r^4} - \frac{4a^2}{r^2}\right)\cos 2\theta \tag{5.20.12a}$$

$$T_{\theta\theta} = \frac{\sigma}{2}\left(1 + \frac{a^2}{r^2}\right) - \frac{\sigma}{2}\left(1 + \frac{3a^4}{r^4}\right)\cos 2\theta \tag{5.20.12b}$$

$$T_{r\theta} = -\frac{\sigma}{2}\left(1 - \frac{3a^4}{r^4} + \frac{2a^2}{r^2}\right)\sin 2\theta \tag{5.20.12c}$$

Putting r = a in these equations, we find that

$$T_{rr} = 0, \quad T_{r\theta} = 0, \quad T_{\theta\theta} = \sigma - 2\sigma\cos 2\theta \tag{5.20.13}$$

We see therefore, at $\theta = \frac{\pi}{2}$ (point m in Fig. 5. 18) and at $\theta = \frac{3\pi}{2}$ (point n in Fig. 5.18), $T_{\theta\theta} = 3\sigma$. This is the maximum tensile stress which is three times the uniform stress σ applied at the ends of the plate. This is referred to as a stress concentration.

5.21 Hollow Sphere Subjected to Internal and External Pressure

Let the internal and external radii of the hollow sphere be denoted by a_i and a_o respectively and let the internal pressure be p_i and the external pressure be p_o, both pressures are assumed to be uniform. With respect to the spherical coordinates (r, θ, φ), it is clear that due to the spherical symmetry of the geometry and the loading that each particle of the elastic sphere will experience only a radial displacement whose magnitude depends only on r, that is,

$$u_r = u(r), \quad u_\theta = 0, u_\phi = 0 \tag{5.21.1}$$

substituting Eq. (5.21.1) into the Navier equation of equilibrium in spherical coordinates, Eqs. (5.6.4) in the absence of body forces, we obtain

$$(\lambda + \mu)\frac{de}{dr} + \mu\left[\frac{d}{dr}\left(\frac{1}{r^2}\frac{d}{dr}(r^2 u)\right)\right] = 0 \tag{5.21.2a}$$

where, see Eq. (5.6.3g)

$$e = \frac{du}{dr} + \frac{2u}{r} \tag{5.21.2b}$$

Thus,

$$(\lambda + 2\mu)\frac{d}{dr}\left(\frac{du}{dr} + \frac{2u}{r}\right) = 0 \tag{5.21.3}$$

The general solution of the above equation is

$$u = Ar + \frac{B}{r^2} \tag{5.21.4}$$

The stress components corresponding to this displacement field can be obtained from Eqs. (5.6.3), with $e = 3A$:

$$T_{rr} = \lambda e + 2\mu\frac{du}{dr} = (3\lambda + 2\mu)A - \frac{4\mu B}{r^3} \tag{5.21.5a}$$

$$T_{\theta\theta} = T_{\phi\phi} = \lambda e + \frac{2\mu u}{r} = (3\lambda + 2\mu)A + \frac{2\mu B}{r^3} \tag{5.21.5b}$$

$$T_{r\phi} = T_{\phi\theta} = T_{r\theta} = 0 \tag{5.21.5c}$$

To determine the constants A and B, we use the boundary conditions:

$$T_{rr} = -p_i \quad at \ r = a_i \tag{5.21.6a}$$

$$T_{rr} = -p_o \quad at \ r = a_o \tag{5.21.6b}$$

i.e.,

$$(3\lambda + 2\mu)A - \frac{4\mu B}{a_i^3} = -p_i \tag{5.21.7a}$$

$$(3\lambda + 2\mu)A - \frac{4\mu B}{a_o^3} = -p_o \tag{5.21.7b}$$

Thus,

$$A = \frac{p_i a_i^3 - p_o a_o^3}{(3\lambda + 2\mu)(a_o^3 - a_i^3)}, \qquad B = \frac{a_i^3 a_o^3 (p_i - p_o)}{4\mu\,(a_o^3 - a_i^3)} \tag{5.21.8}$$

and the stress components become

$$T_{rr} = \frac{p_i a_i^3 - p_o a_o^3}{(a_o^3 - a_i^3)} - \frac{a_i^3 a_o^3 \ p_i - p_o}{r^3 \ (a_o^3 - a_i^3)} \tag{5.21.9a}$$

$$T_{\theta\theta} = T_{\varphi\varphi} = \frac{p_i a_i^3 - p_o a_o^3}{a_o^3 - a_i^3} + \frac{a_i^3 a_o^3 \,(p_i - p_o)}{2r^3 \ (a_o^3 - a_i^3)} \tag{5.21.9b}$$

We note that the stresses are not dependent on the elastic properties.

Part B Linear Anisotropic Elastic Solid

5.22 Constitutive Equations for Linearly Anisotropic Elastic Solid

In Section 5. 2, we concluded that due to the symmetry of the strain and the stress tensors E_{ij} and T_{ij} respectively, and the assumption that there exists a strain energy function U given by $U = 1/2C_{ijkl}E_{ij}E_{kl}$, the most general anisotropic elastic solid requires 21 elastic constants for its description. We can write the stress-strain relation for this general case in the following matrix notation:

$$\begin{bmatrix} T_{11} \\ T_{22} \\ T_{33} \\ T_{23} \\ T_{31} \\ T_{12} \end{bmatrix} = \begin{bmatrix} C_{1111} & C_{1122} & C_{1133} & C_{1123} & C_{1113} & C_{1112} \\ C_{1122} & C_{2222} & C_{2233} & C_{2223} & C_{2213} & C_{1222} \\ C_{1133} & C_{2233} & C_{3333} & C_{2333} & C_{1333} & C_{1233} \\ C_{1123} & C_{2223} & C_{2333} & C_{2323} & C_{2313} & C_{1223} \\ C_{1113} & C_{2213} & C_{1333} & C_{2313} & C_{1313} & C_{1213} \\ C_{1112} & C_{1222} & C_{1233} & C_{1223} & C_{1213} & C_{1212} \end{bmatrix} \begin{bmatrix} E_{11} \\ E_{22} \\ E_{33} \\ 2E_{23} \\ 2E_{31} \\ 2E_{12} \end{bmatrix} \tag{5.22.1}$$

The indices in Eq. (5.22.1) are quite cumbersome, but they emphasize the tensorial character of the tensors **T**,**E** and **C**. Equation (5.22.1) is often written in the following "contracted form" in which the indices are simplified or "contracted."

$$\begin{bmatrix} T_{11} \\ T_{22} \\ T_{33} \\ T_{23} \\ T_{31} \\ T_{12} \end{bmatrix} = \begin{bmatrix} C_{11} & C_{12} & C_{13} & C_{14} & C_{15} & C_{16} \\ C_{12} & C_{22} & C_{23} & C_{24} & C_{25} & C_{26} \\ C_{13} & C_{23} & C_{33} & C_{34} & C_{35} & C_{36} \\ C_{14} & C_{24} & C_{34} & C_{44} & C_{45} & C_{46} \\ C_{15} & C_{25} & C_{35} & C_{45} & C_{55} & C_{56} \\ C_{16} & C_{26} & C_{36} & C_{46} & C_{56} & C_{66} \end{bmatrix} \begin{bmatrix} E_{11} \\ E_{22} \\ E_{33} \\ 2E_{23} \\ 2E_{31} \\ 2E_{12} \end{bmatrix} \tag{5.22.2}$$

or

$$\begin{bmatrix} T_1 \\ T_2 \\ T_3 \\ T_4 \\ T_5 \\ T_6 \end{bmatrix} = \begin{bmatrix} C_{11} & C_{12} & C_{13} & C_{14} & C_{15} & C_{16} \\ C_{12} & C_{22} & C_{23} & C_{24} & C_{25} & C_{26} \\ C_{13} & C_{23} & C_{33} & C_{34} & C_{35} & C_{36} \\ C_{14} & C_{24} & C_{34} & C_{44} & C_{45} & C_{46} \\ C_{15} & C_{25} & C_{35} & C_{45} & C_{55} & C_{56} \\ C_{16} & C_{26} & C_{36} & C_{46} & C_{56} & C_{66} \end{bmatrix} \begin{bmatrix} E_1 \\ E_2 \\ E_3 \\ E_4 \\ E_5 \\ E_6 \end{bmatrix} \tag{5.22.3a}$$

We note that Eq. (5.22.3a) can also be written in indicial notation

$$T_i = C_{ij}E_j \tag{5.22.3b}$$

However, it must be emphasized that C_{ij} are not components of a second order tensor and T_i are not those of a vector.

The matrix **C** is known as the **stiffness matrix** for the elastic solid. In the notation of Eq. (5.22.3), the strain energy U is given by

$$U = \frac{1}{2}[E_1, E_2, E_3, E_4, E_5, E_6]\begin{bmatrix} C_{11} & C_{12} & C_{13} & C_{14} & C_{15} & C_{16} \\ C_{12} & C_{22} & C_{23} & C_{24} & C_{25} & C_{26} \\ C_{13} & C_{23} & C_{33} & C_{34} & C_{35} & C_{36} \\ C_{14} & C_{24} & C_{34} & C_{44} & C_{45} & C_{46} \\ C_{15} & C_{25} & C_{35} & C_{45} & C_{55} & C_{56} \\ C_{16} & C_{26} & C_{36} & C_{46} & C_{56} & C_{66} \end{bmatrix}\begin{bmatrix} E_1 \\ E_2 \\ E_3 \\ E_4 \\ E_5 \\ E_6 \end{bmatrix} \tag{5.22.4}$$

We require that the strain energy U be a positive definite function of the strain components. That is, it is zero if and only if all strain components are zero and otherwise it is positive. Thus, the stiffness matrix is said to be a positive definite matrix which has among its properties : (1) All diagonal elements are positive, i.e., $C_{ii} > 0$ (no sum on i)† (2) the determinant of **C** is positive, i.e. det**C** > 0, and (3) its inverse $\mathbf{S} = \mathbf{C}^{-1}$ exists and is also symmetric and positive definite. (See Example 5.22.1). The matrix **S** (the inverse of **C**) is known as the **compliance matrix.**

As already mentioned in the beginning of this chapter, the assumption of the existence of a strain energy function is motivated by the concept of elasticity which implies that all strain states of an elastic body requires positive work to be done on it and the work is completely used to increase the strain energy of the body.

Example 5.22.1

Show that (a) $C_{ii} > 0$ (no sum on i) (b) the determinant of **C** is positive (c) the inverse of **C** is symmetric and (d) the inverse is positive definite, (e) the submatrices

$$\begin{bmatrix} C_{11} & C_{12} \\ C_{12} & C_{22} \end{bmatrix}, \begin{bmatrix} C_{22} & C_{23} \\ C_{23} & C_{33} \end{bmatrix}, \begin{bmatrix} C_{11} & C_{12} & C_{13} \\ C_{12} & C_{22} & C_{23} \\ C_{13} & C_{23} & C_{33} \end{bmatrix}$$

etc. are positive definite.

Solution. (a) Consider the case where only E_1 is nonzero, all other $E_i = 0$, then the strain energy is $U = \frac{1}{2}C_{11}E_{11}^2$. Since $U > 0$, therefore $C_{11} > 0$. Similarly if we consider the case where E_2 is nonzero, all other $E_i = 0$, then $U = \frac{1}{2}C_{22}E_{22}^2$ and $C_{22} > 0$ etc.

---

† An obvious consequence of these restrictions is that in uniaxial loading, a positive strain gives rise to a positive stress and vice versa.

(b) Since the diagonal elements are positive, the eigenvalues of $\mathbf{C}$ are all positive. Thus, the determinant of $\mathbf{C}$ is positive (and nonzero) and the inverse of $\mathbf{C}$ exists.

(c) From $\mathbf{C}\,\mathbf{C}^{-1} = \mathbf{I}$, $(\mathbf{C}\,\mathbf{C}^{-1})^T = \mathbf{I}$, thus, $(\mathbf{C}^{-1})^T\,\mathbf{C}^T = \mathbf{I}$, i.e., $(\mathbf{C}^{-1})^T = (\mathbf{C}^T)^{-1}$.

Now, $\mathbf{C} = \mathbf{C}^T$, therefore $\mathbf{C}^{-1} = (\mathbf{C}^T)^{-1} = (\mathbf{C}^{-1})^T$ and $\mathbf{C}^{-1}$ is symmetric.

(d) Since $\mathbf{C}$ is positive definite, therefore, $\mathbf{a}\cdot\mathbf{C}\,\mathbf{a} > 0$ for any nonzero $\mathbf{a}$. Let $\mathbf{b} = \mathbf{C}\mathbf{a}$ and consider $\mathbf{b}\cdot\mathbf{C}^{-1}\,\mathbf{b}$. We have

$$\mathbf{b}\cdot\mathbf{C}^{-1}\mathbf{b} = \mathbf{C}\mathbf{a}\cdot\mathbf{C}^{-1}\mathbf{C}\mathbf{a} = \mathbf{C}\mathbf{a}\cdot\mathbf{a} = \mathbf{a}\cdot\mathbf{C}\mathbf{a} > 0$$

(e) Consider the case where only E_1 and E_2 are not zero, then from Eq. (5.22.4)

$$2U = [E_1 \;\; E_2]\begin{bmatrix} C_{11} & C_{12} \\ C_{12} & C_{22} \end{bmatrix}\begin{bmatrix} E_1 \\ E_2 \end{bmatrix} > 0$$

That is, the sub-matrix is indeed positive definite. We note that since the inverse of this submatrix is positive definite therefore, the submatrix $\begin{bmatrix} S_{11} & S_{12} \\ S_{12} & S_{22} \end{bmatrix}$ is also positive definite. Now ,

$$S_{11} = \frac{C_{11}}{\Delta_1}$$

where

$$\Delta_1 = C_{11}\,C_{22} - C_{12}^2$$

Since both $C_{11}$and $S_{11}$are positive, therefore $C_{11}\,C_{22} - C_{12}^2 > 0$.

Similarly, the positive definiteness of the submatrix

$$\begin{bmatrix} C_{22} & C_{23} \\ C_{23} & C_{33} \end{bmatrix}$$

can be proved by considering the case where only E_2 and E_3 are nonzero and the positive definiteness of the matrix

$$\begin{bmatrix} C_{11} & C_{12} & C_{13} \\ C_{12} & C_{22} & C_{23} \\ C_{13} & C_{23} & C_{33} \end{bmatrix}$$

can be proved by considering the case where only E_1, E_2 and E_3 are nonzero , etc.

Thus, we see that the determinant of $\mathbf{C}$ and of all submatrices whose diagonal elements are diagonal elements of $\mathbf{C}$ are all positive definite, and similarly the determinant of $\mathbf{S}$ and of all submatrices whose diagonal elements are diagonal elements of $\mathbf{S}$ are all positive definite.

5.23 Plane of Material Symmetry

Let S_1 be a plane whose normal is in the direction of $\mathbf{e}_1$. The transformation

$$\mathbf{e}_1' = -\mathbf{e}_1, \quad \mathbf{e}_2' = \mathbf{e}_2, \quad \mathbf{e}_3' = \mathbf{e}_3 \tag{5.23.1a}$$

describes a reflection with respect to the plane S_1. This transformation can be more conveniently represented by the tensor $\mathbf{Q}$ in the equation

$$\mathbf{e}_i' = \mathbf{Q}\mathbf{e}_i \tag{5.23.1b}$$

where

$$[\mathbf{Q}] = [\mathbf{Q}_1] = \begin{bmatrix} -1 & 0 & 0 \\ 0 & 1 & 0 \\ 0 & 0 & 1 \end{bmatrix} \tag{5.23.1c}$$

If the constitutive relations for a material, written with respect to the $\{\mathbf{e}_i\}$ basis, remain the same under the transformation $[\mathbf{Q}_1]$, then we say that the plane S_1 is a **plane of material symmetry** for that material. For a linearly elastic material, material symmetry with respect to the S_1 plane requires that the components of C_{ijkl} in the equation

$$T_{ij} = C_{ijkl} E_{kl} \tag{5.23.2}$$

be exactly the same as C_{ijkl}' in the equation

$$T_{ij}' = C_{ijkl}' E_{kl}' \tag{5.23.3}$$

under the transformation Eq. (5.23.1). When this is the case, restrictions are imposed on the components of the elasticity tensor, thereby reducing the number of independent components. Let us first demonstrate this kind of reduction with a simpler example, relating the thermal strain with the rise in temperature.

Example 5.23.1

Consider a homogeneous continuum undergoing a uniform temperature change $\Delta\theta = \theta - \theta_o$. Let the relation between the thermal strain e_{ij} and $\Delta\theta$ be given by

$$e_{ij} = -\alpha_{ij}(\Delta\theta) \tag{i}$$

where α_{ij} is the thermal expansion coefficient tensor.

(a) If the plane S_1 defined in Eq. (5.23.1) is a plane of symmetry for the thermal expansion property of the material, what restrictions must be placed on the components of α_{ij} ?

(b) If the planes S_2 and S_3 whose normals are in the direction of $\mathbf{e}_2$ and $\mathbf{e}_3$ respectively are also planes of symmetry , what are the additional restrictions? In this case, the material is said to be **orthotropic** with respect to thermal expansion.

(c) If every plane perpendicular to the S_3 plane is a plane of symmetry, what are the additional restrictions? In this case, the material is said to be **transversely isotropic** with respect to thermal expansion.

Solution. (a) Using the transformation law [See Eq. (2B.13.1c)]

$$[\alpha\ ]' = [\mathbf{Q}]^T [\alpha\ ] [\mathbf{Q}] \tag{ii}$$

we obtain, with $\mathbf{Q}_1$ from Eq. (5.23.1c)

$$[\alpha]' = \begin{bmatrix} -1 & 0 & 0 \\ 0 & 1 & 0 \\ 0 & 0 & 1 \end{bmatrix} \begin{bmatrix} \alpha_{11} & \alpha_{12} & \alpha_{13} \\ \alpha_{21} & \alpha_{22} & \alpha_{23} \\ \alpha_{31} & \alpha_{32} & \alpha_{33} \end{bmatrix} \begin{bmatrix} -1 & 0 & 0 \\ 0 & 1 & 0 \\ 0 & 0 & 1 \end{bmatrix}$$

$$= \begin{bmatrix} \alpha_{11} & -\alpha_{12} & -\alpha_{13} \\ -\alpha_{21} & \alpha_{22} & \alpha_{23} \\ -\alpha_{31} & \alpha_{32} & \alpha_{33} \end{bmatrix} \tag{iii}$$

The requirement that $[\alpha]' = [\alpha]$ results in the restriction that

$$\alpha_{12} = -\alpha_{12} = 0, \quad \alpha_{21} = -\alpha_{21} = 0, \quad \alpha_{13} = -\alpha_{13} = 0, \quad \alpha_{31} = -\alpha_{31} = 0 \tag{iv}$$

Thus, only five coefficients are needed to describe the thermo-expansion behavior if there is one plane of symmetry:

$$[\alpha] = [\alpha]' = \begin{bmatrix} \alpha_{11} & 0 & 0 \\ 0 & \alpha_{22} & \alpha_{23} \\ 0 & \alpha_{32} & \alpha_{33} \end{bmatrix} \tag{v}$$

(b) Corresponding to the S_2 plane, $[\mathbf{Q}_2] = \begin{bmatrix} 1 & 0 & 0 \\ 0 & -1 & 0 \\ 0 & 0 & 1 \end{bmatrix}$ (vi)

Thus, from Eq. (ii) and (vi)

$$[\alpha]' = \begin{bmatrix} \alpha_{11} & 0 & 0 \\ 0 & \alpha_{22} & -\alpha_{23} \\ 0 & -\alpha_{32} & \alpha_{33} \end{bmatrix} \tag{vii}$$

The requirements that $[\alpha]' = [\alpha]$ results in

$$\alpha_{23} = \alpha_{32} = 0 \tag{viii}$$

Thus, only three coefficients are needed to describe the thermal expansion behavior if there are two mutually orthogonal planes of symmetry, i.e.,

$$[\boldsymbol{\alpha}]' = [\boldsymbol{\alpha}] = \begin{bmatrix} \alpha_{11} & 0 & 0 \\ 0 & \alpha_{22} & 0 \\ 0 & 0 & \alpha_{33} \end{bmatrix} \tag{ix}$$

If the S_3 plane is also a plane of symmetry, then with

$$[\mathbf{Q}_3] = \begin{bmatrix} 1 & 0 & 0 \\ 0 & 1 & 0 \\ 0 & 0 & -1 \end{bmatrix} \tag{x}$$

one obtains from Eq. (ii) and (x) that

$$[\boldsymbol{\alpha}]' = \begin{bmatrix} \alpha_{11} & 0 & 0 \\ 0 & \alpha_{22} & 0 \\ 0 & 0 & \alpha_{33} \end{bmatrix} \tag{xi}$$

so that no further reduction takes place. That is, the symmetry with respect to S_1 and S_2 planes automatically ensures the symmetry with respect to the S_3 plane.

(c) All planes that are perpendicular to the S_3 plane have their normals parallel to the plane formed by $\mathbf{e}_1$ and $\mathbf{e}_2$. Let $\mathbf{e}_1'$ denote the normal to the S_β plane which makes an angle of β with the $\mathbf{e}_1$ axis and $\frac{\pi}{2}-\beta$ with the $\mathbf{e}_2$ axis, then with respect to the following set of prime basis:

$$\begin{aligned} \mathbf{e}_1' &= \cos\beta\, \mathbf{e}_1 + \sin\beta \mathbf{e}_2 \\ \mathbf{e}_2' &= -\sin\beta\, \mathbf{e}_1 + \cos\beta \mathbf{e}_2 \\ \mathbf{e}_3' &= \mathbf{e}_3 \end{aligned} \tag{xii}$$

the transformation law Eq. (ii) gives

$$\alpha_{11}' = \cos^2\beta\, \alpha_{11} + \sin^2\beta\, \alpha_{22} \tag{xiiia}$$

$$\alpha_{12}' = (\alpha_{22} - \alpha_{11})\sin\beta\, \cos\beta \tag{xiiib}$$

$$\alpha_{13}' = 0 \tag{xiiic}$$

$$\alpha_{22}' = \alpha_{11} \sin^2\beta + \alpha_{22} \cos^2\beta \tag{xiiid}$$

$$\alpha_{23}' = 0 \tag{xiiie}$$

$$\alpha_{33}' = \alpha_{33} \tag{xiiif}$$

In obtaining the above equations, we have made use of the fact that $\mathbf{e}_1$, $\mathbf{e}_2$, $\mathbf{e}_3$ are planes of symmetry so that $\alpha_{12} = \alpha_{21} = \alpha_{13} = \alpha_{31} = \alpha_{23} = \alpha_{32} = 0$. Now, in addition, since any S_β plane is a plane of symmetry, therefore, [see part (a)]

$$\alpha_{12}' = 0 \tag{xiv}$$

so that from Eq. (xiiib)

$$\alpha_{11} = \alpha_{22} \tag{xv}$$

Thus, only two coefficients are needed to describe the thermal expansion behavior of the a transversely isotropic material.

Finally, if the material is also transversely isotropic with $\mathbf{e}_1$ as its axis of symmetry, then

$$\alpha_{22} = \alpha_{33} \tag{xvi}$$

so that

$$\alpha_{11} = \alpha_{22} = \alpha_{33} \tag{xvii}$$

and the material is isotropic with respect to thermal expansion with only one coefficient for its description.

5.24 Constitutive Equation for a Monoclinic Anisotropic Linearly Elastic Solid.

If a linearly elastic solid has one plane of material symmetry, it is called a **monoclinic material.** We shall demonstrate that for such a material there are 13 independent elasticity coefficients.

Let $\mathbf{e}_1$ be normal to the plane of material symmetry S_1. Then by definition, under the change of basis

$$\mathbf{e}_1' = -\mathbf{e}_1, \quad \mathbf{e}_2' = \mathbf{e}_2, \quad \mathbf{e}_3' = \mathbf{e}_3 \tag{5.24.1a}$$

the components of the fourth order elasticity tensor remain unchanged, i.e.,

$$C_{ijkl}' = C_{ijkl} \tag{i}$$

Now, $C_{ijkl}' = Q_{mi}\, Q_{nj}\, Q_{rk}\, Q_{sl}\, C_{mnrs}$ [Sect. 2B14], therefore

$$C_{ijkl} = Q_{mi}\, Q_{nj}\, Q_{rk}\, Q_{sl}\, C_{mnrs} \tag{ii}$$

where

$$[\mathbf{Q}] = \begin{bmatrix} -1 & 0 & 0 \\ 0 & 1 & 0 \\ 0 & 0 & 1 \end{bmatrix} \tag{5.24.1b}$$

i.e., $Q_{11} = -1$, $Q_{22} = Q_{33} = 1$, and all other $Q_{ij} = 0$. Thus,

$$C_{1112} = Q_{11}\,Q_{11}\,Q_{11}\,Q_{22}\,C_{1112}+0+0... = (-1)(-1)(-1)(+1)\,C_{1112} = -C_{1112} \qquad \text{(iii)}$$

so that

$$C_{1112} = 0 \tag{5.24.2a}$$

Indeed, one can easily see that all C_{ijkl} with an odd number of the subscript 1 are all zero. That is, among the 21 independent coefficients, the following eight (8) are zero

$$C_{1112}=C_{1113}=C_{1222}=C_{1223}=C_{1233}=C_{1322}=C_{1323}=C_{1333} = 0 \tag{5.24.3}$$

and the constitutive equations involve 13 nonzero independent coefficients. Thus, the stress strain laws for a **monoclinic elastic solid** having the x_2x_3 plane as the plane of symmetry, are:

$$T_{11} = C_{1111}\,E_{11} + C_{1122}\,E_{22} + C_{1133}\,E_{33} + 2C_{1123}\,E_{23} \tag{5.24.4a}$$

$$T_{22} = C_{1122}\,E_{11} + C_{2222}\,E_{22} + C_{2233}\,E_{33} + 2C_{2223}\,E_{23} \tag{5.24.4b}$$

$$T_{33} = C_{1133}\,E_{11} + C_{2233}\,E_{22} + C_{3333}\,E_{33} + 2C_{2333}\,E_{23}. \tag{5.24.4c}$$

$$T_{23} = C_{1123}\,E_{11} + C_{2223}\,E_{22} + C_{2333}\,E_{33} + 2C_{2323}\,E_{23} \tag{5.24.4d}$$

$$T_{31} = 2C_{1213}\,E_{12} + 2C_{1313}\,E_{13} \tag{5.24.4e}$$

$$T_{12} = 2C_{1212}\,E_{12} + 2C_{1213}\,E_{13} \tag{5.24.4f}$$

or

$$\begin{bmatrix} T_{11} \\ T_{22} \\ T_{33} \\ T_{23} \\ T_{31} \\ T_{12} \end{bmatrix} = \begin{bmatrix} C_{1111} & C_{1122} & C_{1133} & C_{1123} & 0 & 0 \\ C_{1122} & C_{2222} & C_{2233} & C_{2223} & 0 & 0 \\ C_{1133} & C_{2233} & C_{3333} & C_{2333} & 0 & 0 \\ C_{1123} & C_{2223} & C_{2333} & C_{2323} & 0 & 0 \\ 0 & 0 & 0 & 0 & C_{1313} & C_{1213} \\ 0 & 0 & 0 & 0 & C_{1213} & C_{1212} \end{bmatrix} \begin{bmatrix} E_{11} \\ E_{22} \\ E_{33} \\ 2E_{23} \\ 2E_{31} \\ 2E_{12} \end{bmatrix} \tag{5.24.5}$$

Or, in contracted notation , the stiffness matrix is given by

$$[\,\mathbf{C}\,] = \begin{bmatrix} C_{11} & C_{12} & C_{13} & C_{14} & 0 & 0 \\ C_{12} & C_{22} & C_{23} & C_{24} & 0 & 0 \\ C_{13} & C_{23} & C_{33} & C_{34} & 0 & 0 \\ C_{14} & C_{24} & C_{34} & C_{44} & 0 & 0 \\ 0 & 0 & 0 & 0 & C_{55} & C_{56} \\ 0 & 0 & 0 & 0 & C_{56} & C_{66} \end{bmatrix} \tag{5.24.6}$$

The coefficients in the stiffness matrix **C** must satisfy the conditions [See Sect. 5.22] that each diagonal element $C_{ii} > 0$ (no sum on i) for $i = 1,2....6$ and the determinant of every submatrix whose diagonal elements are diagonal elements of the matrix **C** is positive definite [See Example 5.22.1].

5.25 Constitutive Equations for an Orthotropic Linearly Elastic Solid.

If a linearly elastic solid has two mutually perpendicular planes of symmetry, say S_1 plane with unit normal $\mathbf{e}_1$ and S_2 plane with unit normal $\mathbf{e}_2$, then automatically, the S_3 plane with a normal in the direction of $\mathbf{e}_3$, is also a plane of material symmetry [see Example 5.25.1 below]. The material is called an **orthotropic material.**

For this solid, the coefficient C_{ijkl} now must be invariant with respect to the transformation given by Eq. (5.24.1) above as well as the following transformation

$$\mathbf{e}_1' = \mathbf{e}_1, \quad \mathbf{e}_2' = -\mathbf{e}_2, \quad \mathbf{e}_3' = \mathbf{e}_3. \tag{5.25.1}$$

Thus, all those C_{ijkl} which appear in Eq. (5.24.5) and which have an odd number of the subscript 2 must also be zero. For example

$$C_{1123} = Q_{11}\,Q_{11}\,Q_{22}\,Q_{33}\,C_{1123} + 0 + 0... = (-1)(-1)(-1)(+1)C_{1123} = -C_{1123} \tag{i}$$

That is, in addition to Eqs. (5.24.3), we also have

$$C_{1123} = C_{2223} = C_{2333} = C_{1213} = 0 \tag{5.25.2}$$

Therefore, there are now only 9 independent coefficients and the constitutive equations become:

$$T_{11} = C_{1111}\,E_{11} + C_{1122}\,E_{22} + C_{1133}\,E_{33} \tag{5.25.3a}$$

$$T_{22} = C_{1122}\,E_{11} + C_{2222}\,E_{22} + C_{2233}\,E_{33} \tag{5.25.3b}$$

$$T_{33} = C_{1133}\,E_{11} + C_{2233}\,E_{22} + C_{3333}\,E_{33}. \tag{5.25.3c}$$

$$T_{12} = 2C_{1212}\,E_{12} \tag{5.25.3d}$$

$$T_{31} = 2C_{1313}\,E_{31} \tag{5.25.3e}$$

$$T_{23} = 2C_{2323}\,E_{23} \tag{5.25.3f}$$

or,

$$\begin{bmatrix} T_{11} \\ T_{22} \\ T_{33} \\ T_{23} \\ T_{31} \\ T_{12} \end{bmatrix} = \begin{bmatrix} C_{1111} & C_{1122} & C_{1133} & 0 & 0 & 0 \\ C_{1122} & C_{2222} & C_{2233} & 0 & 0 & 0 \\ C_{1133} & C_{2233} & C_{3333} & 0 & 0 & 0 \\ 0 & 0 & 0 & C_{2323} & 0 & 0 \\ 0 & 0 & 0 & 0 & C_{1313} & 0 \\ 0 & 0 & 0 & 0 & 0 & C_{1212} \end{bmatrix} \begin{bmatrix} E_{11} \\ E_{22} \\ E_{33} \\ 2E_{23} \\ 2E_{31} \\ 2E_{12} \end{bmatrix} \tag{5.25.4}$$

and in contracted notation, the stiffness matrix is

$$[\mathbf{C}] = \begin{bmatrix} C_{11} & C_{12} & C_{13} & 0 & 0 & 0 \\ C_{12} & C_{22} & C_{23} & 0 & 0 & 0 \\ C_{13} & C_{23} & C_{33} & 0 & 0 & 0 \\ 0 & 0 & 0 & C_{44} & 0 & 0 \\ 0 & 0 & 0 & 0 & C_{55} & 0 \\ 0 & 0 & 0 & 0 & 0 & C_{66} \end{bmatrix} \tag{5.25.5}$$

where again each diagonal element $C_{ii} > 0$ (no sum on i) for $i = 1,2....6$ and

$$\det\begin{bmatrix} C_{11} & C_{21} \\ C_{12} & C_{22} \end{bmatrix} > 0, \quad \det\begin{bmatrix} C_{22} & C_{23} \\ C_{23} & C_{33} \end{bmatrix} > 0$$

and

$$\det\begin{bmatrix} C_{11} & C_{12} & C_{13} \\ C_{12} & C_{22} & C_{23} \\ C_{13} & C_{23} & C_{33} \end{bmatrix} > 0$$

Example 5.25.1

(a) Show that all the components C_{ijkl} remain the same under the transformation

$$[\mathbf{Q}] = \begin{bmatrix} -1 & 0 & 0 \\ 0 & -1 & 0 \\ 0 & 0 & -1 \end{bmatrix} = -[\mathbf{I}]$$

(b) Let

$$[\mathbf{Q}_1] = \begin{bmatrix} -1 & 0 & 0 \\ 0 & 1 & 0 \\ 0 & 0 & 1 \end{bmatrix}, \quad [\mathbf{Q}_2] = \begin{bmatrix} 1 & 0 & 0 \\ 0 & -1 & 0 \\ 0 & 0 & 1 \end{bmatrix}, \quad [\mathbf{Q}_3] = \begin{bmatrix} 1 & 0 & 0 \\ 0 & 1 & 0 \\ 0 & 0 & -1 \end{bmatrix}$$

Verify that $[\mathbf{Q}_1][\mathbf{Q}_2] = -[\mathbf{I}]\,[\mathbf{Q}_3]$.

Solution. (a) With

$$Q_{ij} = -\delta_{ij}$$

the equation

$$C'_{ijkl} = Q_{mi}\,Q_{nj}\,Q_{rk}\,Q_{sl}\,C_{mnrs}$$

becomes

$$C'_{ijkl} = (-\delta_{mi})\,(-\delta_{nj})\,(-\delta_{rk})\,(-\delta_{sl})\,C_{mnrs} = C_{ijkl}$$

(b)

$$[\mathbf{Q}_1]\,[\mathbf{Q}_2] = \begin{bmatrix} -1 & 0 & 0 \\ 0 & 1 & 0 \\ 0 & 0 & 1 \end{bmatrix} \begin{bmatrix} 1 & 0 & 0 \\ 0 & -1 & 0 \\ 0 & 0 & 1 \end{bmatrix} = \begin{bmatrix} -1 & 0 & 0 \\ 0 & -1 & 0 \\ 0 & 0 & 1 \end{bmatrix} = -\begin{bmatrix} 1 & 0 & 0 \\ 0 & 1 & 0 \\ 0 & 0 & -1 \end{bmatrix}$$

That is

$$[\mathbf{Q}_1][\mathbf{Q}_2] = -[\mathbf{I}]\,[\mathbf{Q}_3]$$

From the results of (a) and (b), we see that if the x-plane and the y-plane are planes of material symmetry, then the z-plane is also a plane of symmetry.

5.26 Constitutive Equation for a Transversely Isotropic Linearly Elastic Material

If there exists a plane, say S_3 plane, such that every plane perpendicular to it, is a plane of material symmetry, then the material is called a **transversely isotropic material**. The S_3 plane is called the plane of isotropy and its normal direction $\mathbf{e}_3$ is the axis of transverse isotropy. Clearly, a transversely isotropic material is also orthotropic.

Let S_β represent a plane whose normal $\mathbf{e}_1'$ is parallel to the S_3 plane and which makes an angle of β with the $\mathbf{e}_1$ axis which lies in the S_3 plane. Then, for every angle β, the plane S_β is, by definition, a plane of symmetry. Thus, if C'_{ijkl} are components of the tensor $\mathbf{C}$ with respect to the basis $\mathbf{e}_i'$ given below:

$$\begin{aligned} \mathbf{e}_1' &= \cos\beta\,\mathbf{e}_1 + \sin\beta\,\mathbf{e}_2 \\ \mathbf{e}_2' &= -\sin\beta\,\mathbf{e}_1 + \cos\beta\,\mathbf{e}_2 \\ \mathbf{e}_3' &= \mathbf{e}_3 \end{aligned} \tag{5.26.1}$$

then, from Eq. (5.24.3), we must have

$$C'_{1113} = C'_{1223} = C'_{1322} = C'_{1333} = 0 \tag{ia}$$

$$C'_{1112} = C'_{1222} = C'_{1233} = C'_{1323} = 0 \tag{ib}$$

We now show that the condition given in Eq. (ia) are automatically satisfied for every β and therefore do not lead to any further restrictions on C_{ijkl} whereas the conditions given in Eq. (ib) do lead to additional restrictions, in addition to those restricted by orthotropy.

Since

$$Q_{13} = Q_{31} = Q_{23} = Q_{32} = 0 \tag{ii}$$

therefore,

$$\begin{aligned} C'_{1113} = {} & Q_{11}^3 Q_{13}\, C_{1111} + Q_{11}^2 Q_{21} Q_{23}\, C_{1122} + Q_{21}^2 Q_{11} Q_{13}\, C_{2211} \\ & + Q_{11}^2 Q_{31} Q_{33}\, C_{1133} + Q_{31}^2 Q_{11} Q_{13}\, C_{3311} + Q_{11}^2 Q_{21} Q_{23}\, C_{1212} + Q_{11} Q_{21}^2 Q_{13}\, C_{1221} \\ & + Q_{21}^2 Q_{11} Q_{13}\, C_{2121} + Q_{21} Q_{11}^2 Q_{23}\, C_{2112} + \ldots = 0 + 0 + \ldots = 0 \end{aligned} \tag{iii}$$

That is , $C'_{1113} = 0$ is automatically satisfied together with

$$C'_{1223} = C'_{1322} = C'_{1333} = 0 \tag{iv}$$

On the other hand, since $Q_{33} = 1$, we have

$$C'_{1323} = Q_{11}\, Q_{12} C_{1313} + Q_{21}\, Q_{22}\, C_{2323} = 0 \tag{v}$$

This requirement leads to

$$\cos\beta \sin\beta\, (C_{1313} - C_{2323}) = 0 \tag{vi}$$

That is,

$$C_{1313} = C_{2323} \tag{5.26.2}$$

Similarly, the equation $C'_{1233} = 0$ leads to [See Prob. 5.85]

$$C_{1133} = C_{2233} \tag{5.26.3}$$

Also, from $C'_{1112}=0$, we obtain

$$\begin{aligned} C'_{1112} = {} & Q_{11}^3 Q_{12} C_{1111} + Q_{21}^3 Q_{22} C_{2222} + Q_{11}^2 Q_{21} Q_{22} C_{1122} + Q_{21}^2 Q_{11} Q_{12} C_{2211} \\ & + Q_{11}^2 Q_{21} Q_{22} C_{1212} + Q_{11} Q_{21}^2 Q_{12} C_{1221} + Q_{21}^2 Q_{11} Q_{12} C_{2121} + Q_{21} Q_{11}^2 Q_{22} C_{2112} \\ = {} & \cos\beta \sin\beta\, (-\cos^2\beta\, C_{1111} + \sin^2\beta C_{2222} + \cos^2\beta C_{1122} - \sin^2\beta C_{2211} \\ & + \cos^2\beta C_{1212} - \sin^2\beta C_{1221} - \sin^2\beta C_{2121} + \cos^2\beta C_{2112}) = 0 \end{aligned} \tag{vii}$$

i.e.,

$$-\cos^2\beta\, C_{1111}+\sin^2\beta C_{2222} + (\cos^2\beta-\sin^2\beta)C_{1122}+2(\cos^2\beta-\sin^2\beta)C_{1212} = 0 \qquad \text{(viii)}$$

Similarly, we can obtain from the equation [see Prob. 5.86)] $C'_{1222} = 0$

$$-\sin^2\beta\, C_{1111}+\cos^2\beta C_{2222} - (\cos^2\beta-\sin^2\beta)C_{1122}-2(\cos^2\beta-\sin^2\beta)C_{1212} = 0 \qquad \text{(ix)}$$

The addition of Eq. (viii) and Eq. (ix) gives

$$C_{1111} = C_{2222} \tag{5.26.4}$$

and Eq. (ix) then gives

$$C_{1212} = \frac{1}{2}(C_{1111}-C_{1122}) \tag{5.26.5}$$

Thus, the number of independent coefficients reduces to 5 and we have for a transversely isotropic elastic solid with the axis of symmetry in the $\mathbf{e}_3$ direction the following stress strain laws

$$\begin{bmatrix} T_{11} \\ T_{22} \\ T_{33} \\ T_{23} \\ T_{31} \\ T_{12} \end{bmatrix} = \begin{bmatrix} C_{1111} & C_{1122} & C_{1133} & 0 & 0 & 0 \\ C_{1122} & C_{1111} & C_{1133} & 0 & 0 & 0 \\ C_{1133} & C_{1133} & C_{3333} & 0 & 0 & 0 \\ 0 & 0 & 0 & C_{1313} & 0 & 0 \\ 0 & 0 & 0 & 0 & C_{1313} & 0 \\ 0 & 0 & 0 & 0 & 0 & (1/2)(C_{1111}-C_{1122}) \end{bmatrix} \begin{bmatrix} E_{11} \\ E_{22} \\ E_{33} \\ 2E_{23} \\ 2E_{31} \\ 2E_{12} \end{bmatrix} \tag{5.26.6}$$

and in contracted notation, the stiffness matrix is

$$[\mathbf{C}] = \begin{bmatrix} C_{11} & C_{12} & C_{13} & 0 & 0 & 0 \\ C_{12} & C_{11} & C_{13} & 0 & 0 & 0 \\ C_{13} & C_{13} & C_{33} & 0 & 0 & 0 \\ 0 & 0 & 0 & C_{44} & 0 & 0 \\ 0 & 0 & 0 & 0 & C_{44} & 0 \\ 0 & 0 & 0 & 0 & 0 & (1/2)(C_{11}-C_{12}) \end{bmatrix} \tag{5.26.7}$$

In the above reduction of the elastic coefficients, we demanded that every S_β plane be a plane of material symmetry so that Eqs. (i) must be satisfied for all β. Equivalently, we can demand that the elastic coefficients C'_{ijkl} be the same as C_{ijkl} for all β and achieve the same reductions.

The elements of the stiffness matrix satisfy the conditions:

$$C_{11} > 0\,,\, C_{33} > 0\,, C_{44} > 0\,,\, C_{11} - C_{12} > 0 \tag{5.26.7a}$$

$$\det\begin{bmatrix} C_{11} & C_{12} \\ C_{12} & C_{11} \end{bmatrix} = C_{11}^2 - C_{12}^2 > 0 \tag{5.26.7b}$$

and

$$\det\begin{bmatrix} C_{11} & C_{12} & C_{13} \\ C_{12} & C_{11} & C_{13} \\ C_{13} & C_{13} & C_{33} \end{bmatrix} = C_{11}^2 C_{33} - 2C_{12}C_{13}^2 - 2C_{11}C_{13}^2 - C_{33}C_{12}^2 > 0. \tag{5.26.7c}$$

We note also that the stiffness matrix for transverse isotropy has also been written in the following form:

$$\begin{bmatrix} T_{11} \\ T_{22} \\ T_{33} \\ T_{23} \\ T_{31} \\ T_{12} \end{bmatrix} = \begin{bmatrix} \lambda+2\mu_T & \lambda & \lambda+\alpha & 0 & 0 & 0 \\ \lambda & \lambda+2\mu_T & \lambda+\alpha & 0 & 0 & 0 \\ \lambda+\alpha & \lambda+\alpha & \lambda+2\alpha+4\mu_L-2\mu_T+\beta & 0 & 0 & 0 \\ 0 & 0 & 0 & \mu_T & 0 & 0 \\ 0 & 0 & 0 & 0 & \mu_T & 0 \\ 0 & 0 & 0 & 0 & 0 & \mu_L \end{bmatrix} \begin{bmatrix} E_{11} \\ E_{22} \\ E_{33} \\ 2E_{23} \\ 2E_{31} \\ 2E_{12} \end{bmatrix} \tag{5.26.8}$$

where we note that there are five constants $\lambda, \mu_T, \mu_L, \alpha$ and β.

5.27 Constitutive Equation for Isotropic Linearly Elastic Solids

The stress strain equations given in the last section is for a transversely isotropic elastic solid whose axis of transverse isotropy is in the $\mathbf{e}_3$ direction. If, in addition, $\mathbf{e}_1$ is also an axis of transverse isotropy, then clearly we have

$$C_{2222} = C_{3333} \qquad (C_{22} = C_{33}) \tag{i}$$

$$C_{1122} = C_{1133} \qquad (C_{12} = C_{13}) \tag{ii}$$

$$C_{1313} = C_{1212} \qquad \left(C_{44} = \frac{(C_{11}-C_{12})}{2}\right) \tag{iii}$$

and the stress strain law is

$$\begin{bmatrix} T_{11} \\ T_{22} \\ T_{33} \\ T_{23} \\ T_{31} \\ T_{12} \end{bmatrix} = \begin{bmatrix} C_{11} & C_{12} & C_{12} & 0 & 0 & 0 \\ C_{12} & C_{11} & C_{12} & 0 & 0 & 0 \\ C_{12} & C_{12} & C_{11} & 0 & 0 & 0 \\ 0 & 0 & 0 & \frac{(C_{11}-C_{12})}{2} & 0 & 0 \\ 0 & 0 & 0 & 0 & \frac{(C_{11}-C_{12})}{2} & 0 \\ 0 & 0 & 0 & 0 & 0 & \frac{(C_{11}-C_{12})}{2} \end{bmatrix} \begin{bmatrix} E_{11} \\ E_{22} \\ E_{33} \\ 2E_{23} \\ 2E_{31} \\ 2E_{12} \end{bmatrix} \tag{5.27.1}$$

where

$$C_{11}>0,\ C_{11}-C_{12}>0,\ C_{11}^2 - C_{12}^2>0,\ C_{11}^3+2C_{12}^3-3C_{11}C_{12}^2>0 \tag{5.27.2}$$

The elements C_{ij} are related to the Lames constants λ and μ as follows

$$C_{11}=\lambda+2\mu,\quad C_{12}=\lambda \tag{5.27.3}$$

5.28 Engineering Constants for Isotropic Elastic Solids.

Since the stiffness matrix is positive definite, the stress-strain law given in Eq. (5.27.1) can be inverted to give the strain components in terms of the stress components. They can be written in the following form

$$\begin{bmatrix} E_{11} \\ E_{22} \\ E_{33} \\ 2E_{23} \\ 2E_{31} \\ 2E_{12} \end{bmatrix} = \begin{bmatrix} \frac{1}{E} & -\frac{\nu}{E} & -\frac{\nu}{E} & 0 & 0 & 0 \\ -\frac{\nu}{E} & \frac{1}{E} & -\frac{\nu}{E} & 0 & 0 & 0 \\ -\frac{\nu}{E} & -\frac{\nu}{E} & \frac{1}{E} & 0 & 0 & 0 \\ 0 & 0 & 0 & \frac{1}{G} & 0 & 0 \\ 0 & 0 & 0 & 0 & \frac{1}{G} & 0 \\ 0 & 0 & 0 & 0 & 0 & \frac{1}{G} \end{bmatrix} \begin{bmatrix} T_{11} \\ T_{22} \\ T_{33} \\ T_{23} \\ T_{31} \\ T_{12} \end{bmatrix} \tag{5.28.1}$$

where as we already know from Section 5.4, E is Young's modulus†, ν is the Poisson's ratio and G is the shear modulus and

$$G=\frac{E}{2(1+\nu)} \tag{5.28.2}$$

The compliance matrix is positive definite, therefore the diagonal elements are all positive, thus

$$E>0,\ \ G>0 \tag{5.28.3a}$$

$$\det\begin{bmatrix} \frac{1}{E} & -\frac{\nu}{E} \\ -\frac{\nu}{E} & \frac{1}{E} \end{bmatrix} = \frac{1}{E^2}(1-\nu^2)>0\,,\ \text{i.e.,}\ \nu^2<1 \tag{5.28.3b}$$

and

$$\det\begin{bmatrix} \frac{1}{E} & -\frac{\nu}{E} & -\frac{\nu}{E} \\ -\frac{\nu}{E} & \frac{1}{E} & -\frac{\nu}{E} \\ -\frac{\nu}{E} & -\frac{\nu}{E} & \frac{1}{E} \end{bmatrix} = \frac{1}{E^3}(1-2\nu^3-3\nu^2) = \frac{1}{E^3}(1-2\nu)(1+\nu)^2>0 \tag{5.28.3c}$$

i.e.,

$$\nu<\frac{1}{2} \tag{5.28.3d}$$

Thus,

$$-1<\nu<\frac{1}{2} \tag{5.28.4}$$

5.29 Engineering Constants for Transversely Isotropic Elastic Solid

For a transversely isotropic elastic solid, the symmetric stiffness matrix with five independent coefficients can be inverted to give a symmetric compliance matrix with also five independent constants. The compliance matrix is

† To simplify the notation, we drop the subscript Y from E.

$$\begin{bmatrix} E_{11} \\ E_{22} \\ E_{33} \\ 2E_{23} \\ 2E_{31} \\ 2E_{12} \end{bmatrix} = \begin{bmatrix} \frac{1}{E_1} & -\frac{\nu_{21}}{E_1} & -\frac{\nu_{31}}{E_3} & 0 & 0 & 0 \\ -\frac{\nu_{21}}{E_1} & \frac{1}{E_1} & -\frac{\nu_{31}}{E_3} & 0 & 0 & 0 \\ -\frac{\nu_{13}}{E_1} & -\frac{\nu_{13}}{E_1} & \frac{1}{E_3} & 0 & 0 & 0 \\ 0 & 0 & 0 & \frac{1}{G_{13}} & 0 & 0 \\ 0 & 0 & 0 & 0 & \frac{1}{G_{13}} & 0 \\ 0 & 0 & 0 & 0 & 0 & \frac{1}{G_{12}} \end{bmatrix} \begin{bmatrix} T_{11} \\ T_{22} \\ T_{33} \\ T_{23} \\ T_{31} \\ T_{12} \end{bmatrix} \tag{5.29.1}$$

The relations between C_{ij} and the engineering constants can be obtained to be [See Prob. 5.88]

$$C_{11} = \frac{E_1}{1+\nu_{21}} \frac{1-\nu_{31}^2(E_1/E_3)}{D} \qquad C_{12} = \frac{E_1}{1+\nu_{21}} \frac{\nu_{21}+\nu_{31}^2(E_1/E_3)}{D} \tag{5.29.2a}$$

$$C_{13} = \frac{E_1 \nu_{31}}{D}, \quad C_{22} = C_{11} \quad C_{23} = C_{13}, \quad C_{44} = G_{13} \tag{5.29.2b}$$

and

$$\frac{C_{11} - C_{12}}{2} = G_{12} \tag{5.29.2c}$$

where

$$D = 1 - \nu_{21} - 2\nu_{31}^2 \left(\frac{E_1}{E_3}\right) > 0 \tag{5.29.2d}$$

From Eq. (5.29.2), it can be obtained easily (See Prob. 5.89)

$$G_{12} = \frac{E_1}{2(1+\nu_{21})} \tag{5.29.3}$$

According to this Eq. (5.29.1), if T_{33} is the only nonzero stress component, then

$$E_{33} = \frac{T_{33}}{E_3}, \quad E_{11} = E_{22} = -\frac{\nu_{31} T_{33}}{E_3} = -\nu_{31} E_{33} \tag{i}$$

Thus, E_3 is the Young's modulus in the $\mathbf{e}_3$ direction (the direction of the axis of transverse isotropy), ν_{31} is the Poisson's ratio for the transverse train in the x_1 or x_2 direction when stressed in the x_3 direction.

If T_{11} is the only nonzero stress component, then

$$E_{11} = \frac{T_{11}}{E_1},\ E_{22} = -\nu_{21}\frac{T_{11}}{E_1} = -\nu_{21}E_{11},\ E_{33} = -\frac{\nu_{13}T_{11}}{E_1} = -\nu_{13}E_{11} \tag{ii}$$

and if T_{22} is the only nonzero stress component, then

$$E_{22} = \frac{T_{22}}{E_1},\ E_{11} = -\nu_{21}\frac{T_{22}}{E_1} = -\nu_{21}E_{22},\ E_{33} = -\nu_{13}\frac{T_{22}}{E_1} = -\nu_{13}E_{22} \tag{iii}$$

Thus, E_1 is the Young's modulus in the $\mathbf{e}_1$ and $\mathbf{e}_2$ directions (i.e., in the plane of isotropy), ν_{21} is the Poisson's ratio for the transverse train in the x_2 direction when stressed in the x_1 direction or transverse strain in the x_1 direction when stressed in the x_2 direction (i.e., Poisson's ratio in the plane of isotropy, $\nu_{12} = \nu_{21}$) and ν_{13} is the Poisson's ratio for the transverse strain in the $\mathbf{e}_3$ direction (the axis of transverse isotropy) when stressed in a direction in the plane of isotropy. We note that since the compliance matrix is symmetric, therefore

$$\frac{\nu_{13}}{E_1} = \frac{\nu_{31}}{E_3} \tag{5.29.4}$$

From $2E_{23} = \dfrac{T_{23}}{G_{13}}$, $2E_{31} = \dfrac{T_{13}}{G_{13}}$ and $2E_{12} = \dfrac{T_{12}}{G_{12}}$, it is clear that G_{12} is the shear modulus in the plane of transverse isotropy and G_{13} is the shear modulus in planes perpendicular to the plane of transverse isotropy.

Since the compliance matrix is positive definite, therefore, the diagonal elements are positive definite. That is,

$$E_1 > 0,\ E_3 > 0,\ G_{12} > 0,\ G_{13} > 0 \tag{5.29.5}$$

Also,

$$\det\begin{bmatrix} \dfrac{1}{E_1} & -\dfrac{\nu_{21}}{E_1} \\ -\dfrac{\nu_{21}}{E_1} & \dfrac{1}{E_1} \end{bmatrix} = \frac{1}{E_1^2}(1 - \nu_{21}^2) > 0 \tag{iv}$$

i.e.,

$$-1 < \nu_{21}^2 < 1 \tag{5.29.6}$$

$$\det\begin{bmatrix} \dfrac{1}{E_1} & -\dfrac{\nu_{31}}{E_3} \\ -\dfrac{\nu_{13}}{E_1} & \dfrac{1}{E_3} \end{bmatrix} = \det\begin{bmatrix} \dfrac{1}{E_1} & -\dfrac{\nu_{31}}{E_3} \\ -\dfrac{\nu_{31}}{E_3} & \dfrac{1}{E_3} \end{bmatrix} = \frac{1}{E_1E_3}\left(1 - \nu_{31}^2\frac{E_1}{E_3}\right) > 0 \tag{v}$$

i.e.,

$$\nu_{31}^2 < \frac{E_3}{E_1} \qquad \text{or} \qquad \nu_{13}\nu_{31} < 1 \tag{5.29.7}$$

Also,

$$\det \begin{bmatrix} \frac{1}{E_1} & -\frac{\nu_{21}}{E_1} & -\frac{\nu_{31}}{E_3} \\ -\frac{\nu_{21}}{E_1} & \frac{1}{E_1} & -\frac{\nu_{31}}{E_3} \\ -\frac{\nu_{13}}{E_1} & -\frac{\nu_{13}}{E_1} & \frac{1}{E_3} \end{bmatrix} = \frac{1}{E_1^2 E_3}\left[1 - 2\left(\frac{E_1}{E_3}\right)\nu_{21}\nu_{31}^2 - 2\left(\frac{E_1}{E_3}\right)\nu_{31}^2 - \nu_{21}^2\right]$$

$$= \left[1 - 2\left(\frac{E_1}{E_3}\right)\nu_{31}^2 - \nu_{21}\right](1 + \nu_{21}) > 0 \tag{vi}$$

Since $1 + \nu_{21} > 0$, therefore,

$$1 - 2\nu_{31}^2\left(\frac{E_1}{E_3}\right) > \nu_{21} \qquad \text{or} \qquad 1 - 2\nu_{31}\nu_{13} > \nu_{21} \tag{5.28.9}$$

5.30 Engineering Constants for Orthotropic Elastic Solid

For an orthotropic elastic solid, the symmetric stiffness matrix with nine independent coefficients can be inverted to give a symmetric compliance matrix with also nine independent constants. The compliance matrix is

$$\begin{bmatrix} E_{11} \\ E_{22} \\ E_{33} \\ 2E_{23} \\ 2E_{31} \\ 2E_{12} \end{bmatrix} = \begin{bmatrix} \frac{1}{E_1} & -\frac{\nu_{21}}{E_2} & -\frac{\nu_{31}}{E_3} & 0 & 0 & 0 \\ -\frac{\nu_{12}}{E_1} & \frac{1}{E_2} & -\frac{\nu_{32}}{E_3} & 0 & 0 & 0 \\ -\frac{\nu_{13}}{E_1} & -\frac{\nu_{23}}{E_2} & \frac{1}{E_3} & 0 & 0 & 0 \\ 0 & 0 & 0 & \frac{1}{G_{23}} & 0 & 0 \\ 0 & 0 & 0 & 0 & \frac{1}{G_{31}} & 0 \\ 0 & 0 & 0 & 0 & 0 & \frac{1}{G_{12}} \end{bmatrix} \begin{bmatrix} T_{11} \\ T_{22} \\ T_{33} \\ T_{23} \\ T_{31} \\ T_{12} \end{bmatrix} \tag{5.30.1}$$

The meanings of the constants in the compliance matrix can be obtained in the same way as in the previous section for the transversely isotropic solid. We have, E_1, E_2 and E_3 are Young's moduli in the $\mathbf{e}_1$, $\mathbf{e}_2$, $\mathbf{e}_3$ directions respectively, G_{23}, G_{31} and G_{12} are shear moduli

in the x_2x_3, x_1x_3 and x_1x_2 plane respectively and ν_{ij} is Poisson's ratio for transverse strain in the j-direction when stressed in the i-th direction.

The relationships between C_{ij} and the engineering constants are given by

$$C_{11} = \frac{1 - \nu_{23}\nu_{32}}{E_2 E_3 \Delta}, \quad C_{12} = \frac{\nu_{21} + \nu_{31}\nu_{23}}{E_2 E_3 \Delta}, \quad C_{23} = \frac{\nu_{31} + \nu_{21}\nu_{32}}{E_2 E_3 \Delta} \tag{5.30.2a}$$

$$C_{22} = \frac{1 - \nu_{13}\nu_{31}}{E_1 E_3 \Delta}, \quad C_{23} = \frac{\nu_{32} + \nu_{12}\nu_{31}}{E_1 E_3 \Delta}, \quad C_{33} = \frac{1 - \nu_{12}\nu_{21}}{E_1 E_2 \Delta} \tag{5.30.2b}$$

$$C_{44} = G_{23}, \quad C_{55} = G_{31}, \quad C_{66} = G_{12} \tag{5.30.2c}$$

where

$$\Delta = \frac{1 - \nu_{12}\nu_{21} - \nu_{23}\nu_{32} - \nu_{31}\nu_{13} - 2\nu_{21}\nu_{32}\nu_{13}}{E_1 E_2 E_3} \tag{5.30.2d}$$

We note also that the compliance matrix is symmetric so that

$$\frac{\nu_{12}}{E_1} = \frac{\nu_{21}}{E_2}, \quad \frac{\nu_{13}}{E_1} = \frac{\nu_{31}}{E_3}, \quad \frac{\nu_{23}}{E_2} = \frac{\nu_{32}}{E_3} \tag{5.30.3}$$

Using the same procedures as in the previous sections we can establish the restrictions for the engineering constants:

$$E_1 > 0, \; E_2 > 0, \; E_3 > 0, \; G_{23} > 0, \; G_{31} > 0, \; G_{12} > 0 \tag{5.30.4a}$$

$$\nu_{21}^2 < \left(\frac{E_2}{E_1}\right); \quad \nu_{12}^2 < \left(\frac{E_1}{E_2}\right) \tag{5.30.4b}$$

$$\nu_{32}^2 < \left(\frac{E_3}{E_2}\right); \quad \nu_{23}^2 < \left(\frac{E_2}{E_3}\right) \tag{5.30.4c}$$

$$\nu_{13}^2 < \left(\frac{E_1}{E_3}\right); \quad \nu_{31}^2 < \left(\frac{E_3}{E_1}\right) \tag{5.30.4d}$$

Also,

$$1 - \nu_{12}\nu_{21} - \nu_{23}\nu_{32} - \nu_{31}\nu_{13} - 2\nu_{21}\nu_{32}\nu_{13} > 0 \tag{5.30.4e}$$

5.31 Engineering Constants for a Monoclinic Elastic Solid

For a monoclinic elastic solid, the symmetric stiffness matrix with thirteen independent coefficients can be inverted to give a symmetric compliance matrix with also thirteen independent constants. The compliance matrix for the case where the $\mathbf{e}_1$ plane is the plane of symmetry can be written:

$$\begin{bmatrix} E_{11} \\ E_{22} \\ E_{33} \\ 2E_{23} \\ 2E_{31} \\ 2E_{12} \end{bmatrix} = \begin{bmatrix} \frac{1}{E_1} & -\frac{\nu_{21}}{E_2} & -\frac{\nu_{31}}{E_3} & \frac{\eta_{41}}{G_4} & 0 & 0 \\ -\frac{\nu_{12}}{E_1} & \frac{1}{E_2} & -\frac{\nu_{32}}{E_3} & \frac{\eta_{42}}{G_4} & 0 & 0 \\ -\frac{\nu_{13}}{E_1} & -\frac{\nu_{23}}{E_2} & \frac{1}{E_3} & \frac{\eta_{43}}{G_4} & 0 & 0 \\ \frac{\eta_{14}}{E_1} & \frac{\eta_{24}}{E_2} & \frac{\eta_{34}}{E_3} & \frac{1}{G_4} & 0 & 0 \\ 0 & 0 & 0 & 0 & \frac{1}{G_5} & \frac{\mu_{65}}{G_6} \\ 0 & 0 & 0 & 0 & \frac{\mu_{56}}{G_5} & \frac{1}{G_6} \end{bmatrix} \begin{bmatrix} T_{11} \\ T_{22} \\ T_{33} \\ T_{23} \\ T_{31} \\ T_{12} \end{bmatrix} \tag{5.31.1}$$

The symmetry of the compliance matrix requires that

$$\frac{\nu_{12}}{E_1} = \frac{\nu_{21}}{E_2}, \quad \frac{\nu_{13}}{E_1} = \frac{\nu_{31}}{E_3}, \quad \frac{\nu_{23}}{E_2} = \frac{\nu_{32}}{E_3}, \tag{5.31.2a}$$

$$\frac{\eta_{14}}{E_1} = \frac{\eta_{41}}{G_4}, \quad \frac{\eta_{24}}{E_2} = \frac{\eta_{42}}{G_4}, \quad \frac{\eta_{34}}{E_3} = \frac{\eta_{43}}{G_4} \quad \frac{\mu_{56}}{G_5} = \frac{\mu_{65}}{G_6} \tag{5.31.2b}$$

If only T_{11} is nonzero, then the strain-stress law gives

$$E_{11} = \frac{T_{11}}{E_1}, \quad \nu_{12} = -\frac{E_{22}}{E_{11}}, \quad \nu_{13} = -\frac{E_{33}}{E_{11}}, \quad 2E_{23} = \eta_{14}E_{11} \tag{i}$$

and if only T_{22} is nonzero, then

$$E_{22} = \frac{T_{22}}{E_2}, \quad \nu_{21} = -\frac{E_{11}}{E_{22}}, \quad \nu_{23} = -\frac{E_{33}}{E_{22}}, \quad 2E_{23} = \eta_{24}E_{22} \tag{ii}$$

etc. Thus, E_1, E_2 and E_3 are Young's modulus in the x_1, x_2 and x_3 direction respectively and again, ν_{ij} is Poisson's ratio for transverse strain in the j-direction when stressed in the i-direction. We note also, for the monoclinic elastic solid with $\mathbf{e}_1$ plane as its plane of symmetry, a uniaxial stress in the x_1 direction, or x_2 direction, produces a shear strain in the x_2x_3 plane also, with η_{ij} as the coupling coefficients.

If only $T_{12} = T_{21}$ are nonzero, then,

$$T_{12} = 2G_6E_{12} \quad \text{and} \quad 2E_{31} = \mu_{65}\frac{T_{12}}{G_6} \tag{iii}$$

and if only $T_{13} = T_{31}$ are nonzero, then,

$$T_{13} = 2G_5E_{13} \quad \text{and} \quad 2E_{12} = \mu_{56}\frac{T_{31}}{G_5} \tag{iv}$$

Thus G_6 is the shear modulus in the plane of x_1x_2 and G_5 is the shear modulus in the plane of x_1x_3. Note also that the shear stresses in the x_1x_2 plane produce shear strain in the x_1x_3 plane and vice versa with μ_{ij} representing the coupling coefficients.

Finally if only $T_{23} = T_{32}$ are nonzero,

$$E_{11} = \eta_{41}\frac{T_{23}}{G_4}, \quad E_{22} = \eta_{42}\frac{T_{23}}{G_4}, \quad E_{33} = \eta_{43}\frac{T_{23}}{G_4}, \quad T_{23} = 2G_4E_{23} \tag{v}$$

We see that G_4 is the shear modulus in the plane of x_2x_3 plane, and the shear stresses in this plane produces normal strains in the three coordinate directions, with η_{ij} representing normal stress-shear stress coupling.

Obviously, due to the positive definiteness of the compliance matrix, all the Young's moduli and the shear moduli are positive. Other restrictions regarding the engineering constants can be obtained in the same way as in the previous section.

Part C Constitutive Equation for Isotropic Elastic Solid Under Large Deformation

5.32 Change of Frame

In classical mechanics, an observer is defined as a rigid body with a clock. In the theory of continuum mechanics, an observer is often referred to as a **frame**. One then speaks of "a change of frame" to mean the transformation between the pair $\{\mathbf{x},t\}$ in one frame to the pair $\{\mathbf{x}^*,t^*\}$ of a different frame, where $\mathbf{x}$ is the position vector of a material point as observed by the un-starred frame and $\mathbf{x}^*$ is that observed by the starred frame and t and t^* are times in the two frames. Since the two frames are rigid bodies, the most general change of frame is given by [See Section 3.6]

$$\mathbf{x}^* = \mathbf{c}(t) + \mathbf{Q}(t)(\mathbf{x} - \mathbf{x}_o) \tag{5.32.1a}$$

$$t^* = t - a \tag{5.32.1b}$$

where $\mathbf{c}(t)$ represents the relative displacement of the base point $\mathbf{x}_o$, $\mathbf{Q}(t)$ is a time-dependent orthogonal tensor, representing a rotation and possibly reflection also (the reflection is included to allow for the observers to use different handed coordinate systems), a is a constant.

It is important to note that a change of frame is different from a change of coordinate system. Each frame can perform any number of coordinate transformations within itself, whereas a transformation between two frames is given by Eqs. (5.32).

The distance between two material points is called a **frame-indifferent** (or objective) scalar because it is the same for any two observers. On the other hand, the speed of a material point obviously depends on the observers as the observers in general move relative to each other. The speed is therefore not frame indifferent (non-objective). We see therefore, that while a scalar is by definition coordinate-invariant, it is not necessarily frame-indifferent (or frame-invariant).

The position vector and the velocity vector of a material point are obviously dependent on the observer. They are examples of vectors that are not frame indifferent. On the other hand, the vector connecting two material points, and the relative velocity of two material points are examples of frame indifferent vectors.

Let the position vector of two material points be $\mathbf{x}_1$, $\mathbf{x}_2$ in the unstarred frame and $\mathbf{x}_1^*$, $\mathbf{x}_2^*$ in the starred frame, then we have from Eq. (5.32.1a)

$$\mathbf{x}_1^* = \mathbf{c}+\mathbf{Q}(t)(\mathbf{x}_1-\mathbf{x}_o) \tag{i}$$

$$\mathbf{x}_2^* = \mathbf{c}+\mathbf{Q}(t)(\mathbf{x}_2-\mathbf{x}_o) \tag{ii}$$

Thus,

$$\mathbf{x}_1^*-\mathbf{x}_2^* = \mathbf{Q}(t)(\mathbf{x}_1-\mathbf{x}_2) \tag{5.32.2}$$

or,

$$\mathbf{b}^* = \mathbf{Q}(t)\mathbf{b} \tag{5.32.3}$$

where $\mathbf{b}$ and $\mathbf{b}^*$ denote the same vector connecting the two material points.

Let $\mathbf{T}$ be a tensor which transforms a frame-indifferent vector $\mathbf{b}$ into a frame-indifferent vector $\mathbf{c}$, i.e.,

$$\mathbf{c} = \mathbf{T}\mathbf{b} \tag{iiia}$$

let $\mathbf{T}^*$ be the same tensor as observed by the starred- frame, then

$$\mathbf{c}^* = \mathbf{T}^*\mathbf{b}^* \tag{iiib}$$

Now since $\mathbf{c}^* = \mathbf{Q}\mathbf{c}$, $\mathbf{b}^* = \mathbf{Q}\mathbf{b}$, therefore,

$$\mathbf{c}^* = \mathbf{Q}\mathbf{c} = \mathbf{Q}\mathbf{T}\mathbf{b} = \mathbf{Q}\mathbf{T}\mathbf{Q}^T\mathbf{b}^* \tag{iv}$$

i.e.,

$$\mathbf{T}^*\mathbf{b}^* = \mathbf{Q}\mathbf{T}\mathbf{Q}^T\mathbf{b}^*$$

Thus,

$$\mathbf{T}^* = \mathbf{Q}\mathbf{T}\mathbf{Q}^T \tag{5.32.4}$$

Summarizing the above, we define that, in a change of frame,

$$\alpha = \alpha^* \qquad \text{for indifferent (or objective) scalar} \tag{5.32.5a}$$

$$\mathbf{b}^* = \mathbf{Q}(t)\mathbf{b} \qquad \text{for indifferent (or objective) vector} \tag{5.32.5b}$$

$$\mathbf{T}^* = \mathbf{Q}(t)\mathbf{T}\mathbf{Q}^T(t) \qquad \text{for indifferent (or objective) tensor} \tag{5.32.5c}$$

Example 5.32.1

Show (a) $d\mathbf{x}$ is an objective vector (b) ds is an objective scalar

Solution. From Eq. (5.32.1)

$$\mathbf{x}^* = \mathbf{c}(t) + \mathbf{Q}(t)(\mathbf{x} - \mathbf{x}_o) \tag{i}$$

we have

$$\mathbf{x}^* + d\mathbf{x}^* = \mathbf{c}(t) + \mathbf{Q}(t)(\mathbf{x} + d\mathbf{x} - \mathbf{x}_0) \tag{ii}$$

therefore

$$d\mathbf{x}^* = \mathbf{Q}(t)d\mathbf{x} \tag{5.32.6}$$

so that $d\mathbf{x}$ is an objective vector

(b) From Eq. (5.32.6),

$$ds^{*2} = d\mathbf{x}^* \cdot d\mathbf{x}^* = \mathbf{Q}(t)d\mathbf{x} \cdot \mathbf{Q}(t)d\mathbf{x} = d\mathbf{x} \cdot \mathbf{Q}^T\mathbf{Q}d\mathbf{x} = d\mathbf{x} \cdot d\mathbf{x} = ds^2 \tag{iii}$$

that is, ds is an objective scalar.

Example 5.32.2

Show that in a change of frame, (a) the velocity vector $\mathbf{v}$ transforms in accordance with the following equation and is therefore not objective

$$\mathbf{v}^* = \mathbf{Q}(t)\,\mathbf{v} + \dot{\mathbf{Q}}(t)(\mathbf{x} - \mathbf{x}_o) + \dot{\mathbf{c}}(t) \tag{5.32.7}$$

(b)the velocity gradient transform in accordance with the following equation and is also not objective

$$\nabla^*\mathbf{v}^* = \mathbf{Q}(\nabla\mathbf{v})\mathbf{Q}^T + \dot{\mathbf{Q}}\mathbf{Q}^T \tag{5.32.8}$$

Solution. (a) From Eqs. (5.32.1)

$$\mathbf{x}^* = \mathbf{c}(t) + \mathbf{Q}(t)(\mathbf{x} - \mathbf{x}_o) \tag{i}$$

$$t^* = t - a \tag{ii}$$

therefore,

$$\frac{d\mathbf{x}^*}{dt^*} = \frac{d\mathbf{x}^*}{dt} = \dot{\mathbf{c}}(t) + \dot{\mathbf{Q}}(\mathbf{x}-\mathbf{x}_o) + \mathbf{Q}\,\mathbf{v} \tag{iii}$$

That is

$$\mathbf{v}^* = \mathbf{Q}(t)\,\mathbf{v} + \dot{\mathbf{c}}(t) + \dot{\mathbf{Q}}(t)(\mathbf{x}-\mathbf{x}_o) \tag{iv}$$

This is not the transformation law for an objective vector. Therefore the velocity vector is non-objective as expected.

(b) From the result of part (a), we have

$$\mathbf{v}^*(\mathbf{x}^*+d\mathbf{x}^*)=\mathbf{Q}(t)\mathbf{v}(\mathbf{x}+d\mathbf{x})+\dot{\mathbf{c}}(t)+\dot{\mathbf{Q}}(t)(\mathbf{x}+d\mathbf{x}-\mathbf{x}_o) \tag{v}$$

and

$$\mathbf{v}^*(\mathbf{x}^*)=\mathbf{Q}(t)\mathbf{v}(\mathbf{x})+\dot{\mathbf{c}}(t)+\dot{\mathbf{Q}}(t)(\mathbf{x}-\mathbf{x}_o) \tag{vi}$$

Subtraction of the above two equations then gives

$$(\nabla^*\mathbf{v}^*)d\mathbf{x}^* = \mathbf{Q}(t)(\nabla\mathbf{v})d\mathbf{x} + \dot{\mathbf{Q}}(t)d\mathbf{x} \tag{vii}$$

But $d\mathbf{x}^* = \mathbf{Q}d\mathbf{x}$, therefore

$$[(\nabla^*\mathbf{v}^*)\mathbf{Q} - \mathbf{Q}(\nabla\mathbf{v}) - \dot{\mathbf{Q}}(t)]d\mathbf{x} = \mathbf{0} \tag{viii}$$

Thus,

$$\nabla^*\mathbf{v}^* = \mathbf{Q}(\nabla\mathbf{v})\mathbf{Q}^T + \dot{\mathbf{Q}}\mathbf{Q}^T \tag{ix}$$

Example 5.32.3

Show that in a change of frame, the deformation gradient $\mathbf{F}$ transforms according to the equation

$$\mathbf{F}^* = \mathbf{Q}(t)\mathbf{F} \tag{5.32.9}$$

Solution. We have, for the starred frame

$$d\mathbf{x}^*=\mathbf{F}^*d\mathbf{X}^* \tag{i}$$

and for the unstarred frame

$$d\mathbf{x}=\mathbf{F}d\mathbf{X} \tag{ii}$$

In a change of frame, $d\mathbf{x}$ and $d\mathbf{x}^*$ are related by Eq. (5.32.6), i.e.,

$$d\mathbf{x}^* = \mathbf{Q}(t)d\mathbf{x} \tag{iii}$$

therefore, using Eqs. (i) and (iii), we have

$$\mathbf{Q}(t)d\mathbf{x} = \mathbf{F}^* d\mathbf{X}^* \tag{iv}$$

Using Eq. (ii), the above equation becomes

$$\mathbf{Q}(t)\mathbf{F}d\mathbf{X} = \mathbf{F}^* d\mathbf{X}^* \tag{v}$$

Now, both $d\mathbf{X}$ and $d\mathbf{X}^*$ denote the same material element at the fixed reference time t_o, therefore, without loss of generality, we can take $\mathbf{Q}(t_o) = \mathbf{I}$, so that

$$d\mathbf{X} = d\mathbf{X}^* \tag{vi}$$

Thus,

$$\mathbf{Q}(t)\mathbf{F} = \mathbf{F}^* \tag{vii}$$

which is Eq. (5.32.9).

Example 5.32.4

Derive the transformation law for (a) the right Cauchy-Green deformation tensor and (b) the left Cauchy-Green deformation tensor

Solution.

(a)The right Cauchy-Green tensor $\mathbf{C}$ is related to the deformation gradient $\mathbf{F}$ by the equation

$$\mathbf{C}=\mathbf{F}^T\mathbf{F} \tag{5.32.10}$$

Thus, from the result of the last example, we have

$$\mathbf{C}^*=\mathbf{F}^{*T}\mathbf{F}^*=[\mathbf{Q}(t)\mathbf{F}]^T\mathbf{Q}(t)\mathbf{F} = =\mathbf{F}^T\mathbf{Q}^T\mathbf{Q}\mathbf{F}=\mathbf{F}^T\mathbf{F} \tag{i}$$

i.e, in a change of frame

$$\mathbf{C}^*=\mathbf{C} \tag{5.32.11}$$

That is, the right Cauchy-Green deformation tensor is not frame-indifferent (or, it is non-objective).

(b) The left Cauchy-Green tensor $\mathbf{B}$ is related to the deformation gradient $\mathbf{F}$ by the equation

$$\mathbf{B}=\mathbf{F}\mathbf{F}^T \tag{5.32.12}$$

Thus, from the result of the last example, we have

$$\mathbf{B}^* = \mathbf{F}^*\mathbf{F}^{T*} = \mathbf{Q}(t)\mathbf{F}[\mathbf{Q}(t)\mathbf{F}]^T = \mathbf{Q}(t)\mathbf{F}\mathbf{F}^T\mathbf{Q}^T(t) \tag{ii}$$

i.e, in a change of frame

$$\mathbf{B}^* = \mathbf{Q}(t)\mathbf{B}\mathbf{Q}^T(t) \tag{5.32.13}$$

Thus, the left Cauchy-Green deformation tensor is frame-indifferent (i.e., it is objective).

We note that it can be easily proved that the inverse of an objective tensor is also objective and that the identity tensor is obviously objective. Thus both the left Cauchy Green deformation tensor **B** and the Eulerian strain tensor $\mathbf{e} = \frac{1}{2}(\mathbf{I}-\mathbf{B}^{-1})$ are objective, while the right Cauchy Green deformation tensor **C** and the Lagrangian strain tensor $\mathbf{E} = \frac{1}{2}(\mathbf{C}-\mathbf{I})$ are non-objective.

We note also that the material time derivative of an objective tensor is in general non-objective.

5.33 Constitutive Equation for an Elastic Medium under Large Deformation.

As in the case of infinitesimal theory for an elastic body , the constitutive equation relates the state of stress to the state of deformation. However, in the case of finite deformation, there are different finite deformation tensors (left Cauchy-Green tensor **B**, right Cauchy-Green tensor **C** , Lagrangian strain tensor **E**, etc. ,) and different stress tensors (Cauchy stress tensor and the two Piola-Kirchhoff stress tensors) defined in Chapter 3 and Chapter 4 respectively. It is not immediately clear what stress tensor is to be related to what deformation tensor. For example, if one assumes that

$$\mathbf{T} = \mathbf{T}(\mathbf{C}) \tag{i}$$

where **T** is the Cauchy stress tensor, and **C** is the right Cauchy-Green tensor, then it can be shown [see Example 5.33.1 below] that this is not an acceptable form of constitutive equation because the law will not be frame-indifferent. On the other hand if one assumes

$$\mathbf{T} = \mathbf{T}(\mathbf{B}) \tag{ii}$$

then , this law is acceptable in that it is independent of observers, but it is limited to isotropic material only (See Example 5.33.3).

The requirement that a constitutive equation must be invariant under the transformation Eq. (5.32.1) (i.e., in a change of frame), is known as the **principle of material frame indifference.** In applying this principle, we shall insist that force and therefore, the Cauchy stress tensor be frame-indifferent. That is in a change of frame

$$\mathbf{T}^* = \mathbf{Q}\mathbf{T}\mathbf{Q}^T \tag{5.33.1}$$

Example 5.33.1

Assume that for some elastic medium, the Cauchy stress $\mathbf{T}$ is proportional to the right Cauchy-Green tensor $\mathbf{C}$. Show that this assumption does not result in a frame-indifferent constitutive equation and is therefore not acceptable.

Solution. The assumption states that,

for the starred frame: $$\mathbf{T}^* = \alpha\, \mathbf{C}^* \tag{i}$$

and for the un-starred frame: $$\mathbf{T} = \alpha\, \mathbf{C} \tag{ii}$$

where we note that since the *same* material is considered by the two frames, therefore the proportional constant must be the same. Now,

$$\mathbf{T}^* = \mathbf{QTQ}^T \text{ [See Eq. (5.33.1)] and } \mathbf{C}^* = \mathbf{C} \text{ [See Eq. (5.32.11)]}$$

therefore, from Eq. (i)

$$\mathbf{QTQ}^T = \alpha\mathbf{C} \tag{iii}$$

so that from Eq. (ii) for all $\mathbf{Q}(t)$

$$\mathbf{T} = \mathbf{QTQ}^T. \tag{iv}$$

The only $\mathbf{T}$ for the above equation to be true is $\mathbf{T} = \mathbf{I}$. Thus, the law is not acceptable.

More generally, if we assume the Cauchy stress to be a function of the right Cauchy Green tensor, then for the starred frame $\mathbf{T}^* = \mathbf{f}(\mathbf{C}^*)$, and for the un-starred frame, $\mathbf{T} = \mathbf{f}(\mathbf{C})$, where again, $\mathbf{f}$ is the same function for both frames because it is for the same material. In a change of frame,

$$\mathbf{QTQ}^T = \mathbf{f}(\mathbf{C}) \tag{v}$$

That is, again

$$\mathbf{QTQ}^T = \mathbf{T} \tag{vi}$$

So that Eq. (i) is not acceptable.

Example 5.33.2

If we assume that the second Piola-Kirchhoff stress tensor $\tilde{\mathbf{T}}$ is a function of the right Cauchy-Green deformation tensor $\mathbf{C}$. Show that it is an acceptable constitutive equation.

Solution. We have, according to the assumption

$$\tilde{\mathbf{T}} = \mathbf{f}(\mathbf{C}) \tag{5.33.2a}$$

and

$$\tilde{\mathbf{T}}^* = \mathbf{f}(\mathbf{C}^*) \tag{5.33.2b}$$

where we demand that both frames (the unstarred and the starred) have the same function **f** for the same material. Now, in a change of frame, the deformation gradient **F** and the Cauchy stress tensor **T** transform in accordance with the following equation:

$$\mathbf{F}^* = \mathbf{QF} \text{ and } \mathbf{T}^* = \mathbf{QTQ}^T \tag{5.33.3}$$

Thus, the second Piola-Kirchhoff stress tensor transforms as [See Prob.5.98]

$$\tilde{\mathbf{T}}^* = \tilde{\mathbf{T}} \tag{5.33.4}$$

Therefore, in a change of frame, the equation

$$\tilde{\mathbf{T}}^* = \mathbf{f}(\mathbf{C}^*) \tag{5.33.5a}$$

transforms into

$$\tilde{\mathbf{T}} = \mathbf{f}(\mathbf{C}) \tag{5.33.5b}$$

which shows that the assumption is acceptable. In fact, it can be shown that Eq. (5.33.5) is the most general constitutive equation for an anisotropic elastic solid [See Prob. 5.100].

Example 5.32.3

If we assume that the Cauchy stress **T** is a function of the left Cauchy Green tensor **B**, is it an acceptable constitutive law?

Solution. For the starred frame,

$$\mathbf{T}^* = \mathbf{f}(\mathbf{B}^*) \tag{5.33.6a}$$

and for the un-starred frame,

$$\mathbf{T} = \mathbf{f}(\mathbf{B}) \tag{5.33.6b}$$

where we note both frames have the same function **f**. In a change of frame, (see Example 5.32.4, Eq. (5.32.13)),

$$\mathbf{T}^* = \mathbf{QTQ}^T \text{ and } \mathbf{B}^* = \mathbf{QBQ}^T$$

Thus,

$$\mathbf{QTQ}^T = \mathbf{f}(\mathbf{QBQ}^T) \tag{5.33.7}$$

That is

$$\mathbf{Q}\mathbf{f}(\mathbf{B})\mathbf{Q}^T = \mathbf{f}(\mathbf{Q}\mathbf{B}\mathbf{Q}^T) \tag{5.33.8}$$

Thus, in order that Eq. (5.32.6) be acceptable as a constitutive law, it must satisfy the condition given by Eq. (5.32.8). Now, in matrix form, the equation

$$\mathbf{T} = \mathbf{f}(\mathbf{B}) \tag{5.33.6b}$$

becomes

$$[\mathbf{T}] = [\mathbf{f}([\mathbf{B}])] \tag{5.33.9}$$

and the equation

$$\mathbf{Q}\mathbf{T}\mathbf{Q}^T = \mathbf{f}(\mathbf{Q}\mathbf{B}\mathbf{Q}^T) \tag{5.33.10}$$

becomes

$$[\mathbf{Q}][\mathbf{T}][\mathbf{Q}]^T = [\mathbf{f}([\mathbf{Q}][\mathbf{B}][\mathbf{Q}]^T)] \tag{5.33.11}$$

Now, if we view the above two matrix equations, Eqs. (5.33.9) and (5.33.11), as those corresponding to a change of rectangular Cartesian basis, then we come to the conclusion that the constitutive equation given by Eq. (5.33.6) describes an isotropic material because both Eqs. (5.33.9) and (5.33.11) have the same function **f**.

We note that the special case

$$\mathbf{T} = \alpha\mathbf{B} \tag{5.32.12}$$

where α is a constant, is called a Hookean Solid.

5.34 Constitutive Equation for an Isotropic Elastic Medium

From the above example, we see that the assumption that **T** is a function of **B** alone leads to the constitutive equation for an isotropic elastic medium under large deformation.

A function such as the function **f**, which satisfies the condition Eq. (5.33.8) is called an **isotropic function.** Thus for an isotropic elastic solid, the Cauchy stress tensor is an isotropic function of the left Cauchy-Green tensor **B**.

It can be proved that in three dimensional space, the most general isotropic function **f**(**B**) can be represented by the following equation

$$\mathbf{f}(\mathbf{B}) = a_0\mathbf{I} + a_1\mathbf{B} + a_2\mathbf{B}^2 \tag{5.34.1}$$

where a_o, a_1 and a_2 are scalar functions of the scalar invariants of the tensor **B**, so that the general constitutive equation for an isotropic elastic solid under large deformation is given by

$$\mathbf{T} = a_o\mathbf{I} + a_1\mathbf{B} + a_2\mathbf{B}^2 \tag{5.34.2}$$

Since a tensor satisfies its own characteristic equation [See Example 5.34.1 below], therefore we have

$$\mathbf{B}^3 - I_1\mathbf{B}^2 + I_2\mathbf{B} - I_3\mathbf{I} = 0 \tag{5.34.3}$$

or,

$$\mathbf{B}^2 = I_1\mathbf{B} - I_2\mathbf{I} + I_3\,\mathbf{B}^{-1} \tag{5.34.4}$$

Substituting Eq. (5.34.4) into Eq. (5.34.2), we obtain

$$\mathbf{T} = \varphi_o\mathbf{I} + \varphi_1\,\mathbf{B} + \varphi_2\,\mathbf{B}^{-1} \tag{5.34.5}$$

where φ_o, φ_1 and φ_2 and φ_2 are scalar functions of the scalar invariants of **B**. This is the alternate form of the constitutive equation for an isotropic elastic solid under large deformations.

Example 5.34.1

Derive the Cayley-Hamilton Theorem, Eq. (5.34.3).

Solution. Since **B** is real and symmetric, there always exists three eigenvalues corresponding to three mutually perpendicular eigenvector directions.[See Section 2B18]. The eigenvalues λ_i satisfies the characteristic equation

$$\lambda_i^3 - I_1\lambda_i^2 + I_2\lambda_i - I_3 = 0 \qquad i = 1,2,3 \tag{5.34.6}$$

The above three equations can be written in a matrix form as

$$\begin{bmatrix}\lambda_1 & 0 & 0\\ 0 & \lambda_2 & 0\\ 0 & 0 & \lambda_3\end{bmatrix}^3 - I_1\begin{bmatrix}\lambda_1 & 0 & 0\\ 0 & \lambda_2 & 0\\ 0 & 0 & \lambda_3\end{bmatrix}^2 + I_2\begin{bmatrix}\lambda_1 & 0 & 0\\ 0 & \lambda_2 & 0\\ 0 & 0 & \lambda_3\end{bmatrix} - I_3 = 0 \tag{5.34.7}$$

Now, the matrix in this equation is the matrix for the tensor **B** using its eigenvectors as the Cartesian rectangular basis. Thus, Eq. (5.34.7) has the invariant form

$$\mathbf{B}^3 - I_1\mathbf{B}^2 + I_2\mathbf{B} - I_3\mathbf{I} = \mathbf{0} \tag{5.34.8}$$

Equation (5.34.2) or equivalently, Eq. (5.34.5) is the most general constitutive equation for an isotropic elastic solid under large deformation.

If the material is incompressible, then the constitutive equation is indeterminate to an arbitrary hydrostatic pressure and the constitutive equation becomes

$$\mathbf{T} = -\,p\,\mathbf{I} + \varphi_1\,\mathbf{B} + \varphi_2\,\mathbf{B}^{-1} \tag{5.34.9}$$

If the functions φ_1 and φ_2 are derived from a potential function A of the invariants I_1 and I_2 such that

$$\varphi_1 = 2\frac{\partial A}{\partial I_1} \text{ and } \varphi_2 = -2\frac{\partial A}{\partial I_2}, \tag{5.34.10}$$

then the constitutive equation becomes

$$\mathbf{T} = -p\,\mathbf{I} + 2\frac{\partial A}{\partial I_1}\mathbf{B} - 2\frac{\partial A}{\partial I_2}\mathbf{B}^{-1} \tag{5.34.11}$$

and the solid is known as an incompressible **hyperelastic isotropic solid.**

5.35 Simple Extension of an Incompressible Isotropic Elastic Solid

A rectangular bar is pulled in the x_1 direction. At equilibrium, the ratio of the deformed length to the undeformed length (i.e., the stretch) is λ_1 in the x_1 direction and λ_2 in the transverse direction. Thus, the equilibrium configuration is given by

$$x_1 = \lambda_1 X_1, \quad x_2 = \lambda_2 X_2, \quad x_3 = \lambda_2 X_3, \qquad \lambda_1\lambda_2^2 = 1 \tag{5.35.1}$$

where the condition $\lambda_1\lambda_2^2 = 1$ describes the **isochoric condition** (i.e., no change in volume).

The left Cauchy-Green deformation tensor **B** and its inverse are given by

$$[\mathbf{B}] = \begin{bmatrix} \lambda_1^2 & 0 & 0 \\ 0 & \lambda_2^2 & 0 \\ 0 & 0 & \lambda_2^2 \end{bmatrix} \qquad [\mathbf{B}^{-1}] = \begin{bmatrix} \frac{1}{\lambda_1^2} & 0 & 0 \\ 0 & \frac{1}{\lambda_2^2} & 0 \\ 0 & 0 & \frac{1}{\lambda_2^2} \end{bmatrix} \tag{5.35.2}$$

From the constitutive equation

$$\mathbf{T} = -p\mathbf{I} + \varphi_1\mathbf{B} + \varphi_2\mathbf{B}^{-1} \tag{5.35.3}$$

we have

$$T_{11} = -p + \varphi_1\lambda_1^2 + \varphi_2\frac{1}{\lambda_1^2} \tag{i}$$

$$T_{22} = T_{33} = -p + \varphi_1\lambda_2^2 + \varphi_2\frac{1}{\lambda_2^2} \tag{ii}$$

Since these stress components are constants, therefore the equations of equilibrium are clearly satisfied. Also, from the boundary conditions that on the surface $x_2 = b$, $T_{22} = 0$ and on the surface $x_3 = c$, $T_{33} = 0$, we obtain

$$T_{22} = T_{33} = 0 \tag{5.35.4}$$

everywhere in the bar. From these equations, we obtain (noting that $\lambda_1\lambda_2^2 = 1$)

$$p = \varphi_1\lambda_2^2 + \frac{\varphi_2}{\lambda_2^2} = \frac{\varphi_1}{\lambda_1} + \varphi_2\lambda_1 \tag{5.35.5}$$

Thus, the normal stress T_{11} needed to stretch the bar (which is laterally unconfined) in the x_1 direction is given by

$$T_{11} = \left(\lambda_1^2 - \frac{1}{\lambda_1}\right)\left(\varphi_1 - \frac{\varphi_2}{\lambda_1}\right) \tag{5.35.6}$$

5.36 Simple Shear of an Incompressible Isotropic Elastic Rectangular Block

The state of simple shear deformation is defined by the following equations relating the spatial coordinates x_i to the material coordinates X_i:

$$x_1 = X_1 + KX_2, \quad x_2 = X_2, \quad x_3 = X_3 \tag{5.36.1}$$

The deformed configuration of the rectangular block is shown in plane view in Fig. 5.19, where one sees that the constant K is the amount of shear

The left Cauchy-Green tensor $\mathbf{B}$ and its inverse are given by

$$[\mathbf{B}] = [\mathbf{F}][\mathbf{F}]^T = \begin{bmatrix} 1 & K & 0 \\ 0 & 1 & 0 \\ 0 & 0 & 1 \end{bmatrix}\begin{bmatrix} 1 & 0 & 0 \\ K & 1 & 0 \\ 0 & 0 & 1 \end{bmatrix} = \begin{bmatrix} 1+K^2 & K & 0 \\ K & 1 & 0 \\ 0 & 0 & 1 \end{bmatrix} \tag{5.36.2}$$

$$[\mathbf{B}^{-1}] = \begin{bmatrix} 1 & -K & 0 \\ -K & 1+K^2 & 0 \\ 0 & 0 & 1 \end{bmatrix} \tag{5.36.3}$$

The scalar invariants are

$$I_1 = 3 + K^2, \quad I_2 = 3 + K_2^2, \quad I_3 = 1 \tag{5.36.4}$$

Thus, from Eq. (5.34.9), we have

$$T_{11} = -p + \varphi_1(1 + K^2) + \varphi_2, \qquad T_{22} = -p + \varphi_1 + \varphi_2(1 + K^2) \tag{i}$$

$$T_{33} = -p + \varphi_1 + \varphi_2, \qquad T_{12} = K(\varphi_1 - \varphi_2), \qquad T_{13} = T_{23} = 0 \tag{ii}$$

Let

$$P = -p + \varphi_1 + \varphi_2 \tag{iii}$$

then

$$T_{11} = -P + \varphi_1 K^2 \qquad T_{22} = -P + \varphi_2 K^2 \qquad T_{33} = -P \tag{5.36.5a}$$

$$T_{12} = K(\varphi_1 - \varphi_2) \qquad T_{13} = T_{23} = 0 \tag{5.36.5b}$$

where φ_1 and φ_2 are function of K^2.

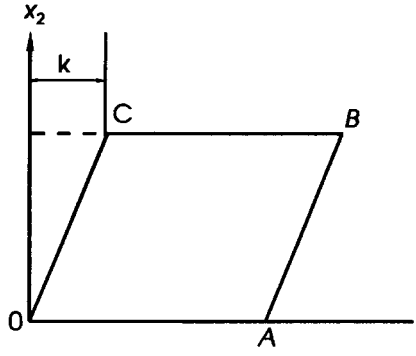

Fig.5.19

The stress components are constants, therefore, the equations of equilibrium are clearly satisfied.

If $X_3 =$ constant plane is free of stress, then

$$P = 0 \tag{iv}$$

so that

$$T_{11} = \varphi_1 K^2, \qquad T_{22} = \varphi_2 K^2, \qquad T_{33} = 0 \qquad T_{12} = K(\varphi_1 - \varphi_2) \tag{5.36.6}$$

where $(\varphi_1 - \varphi_2)$ is sometimes called the generalized shear modulus in the particular undistorted state used as reference. It is an even function of K, the amount of shear. The surface traction needed to maintain this simple shear state of deformation are as follows:

On the top face in the Fig. 5.19, there is a normal stress ($\varphi_2 K^2$) and a shear stress, ($K(\varphi_1 - \varphi_2)$). On the bottom face, an equal and opposite surface traction to that on the top face is acting. On the right face, which at equilibrium is no longer perpendicular to the x_1 axis, but has a unit normal given by

$$\mathbf{n} = \frac{(\mathbf{e}_1 - K\mathbf{e}_2)}{(1+K^2)^{1/2}} \tag{5.36.7}$$

therefore, the surface traction on this deformed surface is given by

$$\mathbf{t} = \mathbf{T}\mathbf{n} = \frac{K}{\sqrt{1+K^2}}[\varphi_2 K\mathbf{e}_1 + (\varphi_1 - (1+K^2)\varphi_2)\mathbf{e}_2] \tag{5.36.8}$$

Thus, the normal stress on this surface is

$$T_n = \mathbf{t}\cdot\mathbf{n} = -\frac{K^2}{1+K^2}[\varphi_1 - (2+K^2)\varphi_2] \tag{5.36.9}$$

and the shear stress on this same surface is, with $\mathbf{e}_T = \dfrac{(K\mathbf{e}_1 + \mathbf{e}_2)}{\sqrt{1+K^2}}$

$$T_s = \mathbf{t}\cdot\mathbf{e}_T = \frac{K}{1+K^2}(\varphi_1 - \varphi_2) \tag{5.36.10}$$

We see from the above equation that, in addition to shear stresses, normal stresses are needed to maintain the simple shear state of deformation.

We also note that

$$T_{11} - T_{22} = KT_{12} \tag{5.36.11}$$

This is a universal relation, independent of the coefficients φ_i of the material.

5.37 Bending of a Incompressible Rectangular Bar.

It is easy to see that the deformation of a rectangular bar into a curved bar shown in Fig. 5.20 can be described by the following equations

$$r = (2\alpha X + \beta)^{1/2}, \quad \theta = cY, \quad z = Z, \qquad \alpha = \frac{1}{c} \tag{5.37.1}$$

where (X,Y,Z) are Cartesian material coordinates and (r, θ, z) are cylindrical spatial coordinates. Indeed, the boundary plane $X = -a$ and $X = a$ deform into cylindrical surfaces $r_1 = \sqrt{-2\alpha a + \beta}$ and $r_2 = \sqrt{2\alpha a + \beta}$ and the boundary planes $Y = \pm b$ deform into the planes $\theta = \pm cb$.

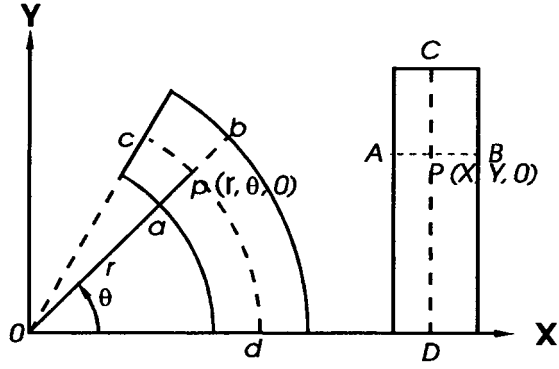

Fig.5.20

The left Cauchy-Green tensor **B** corresponding to this deformation field can be calculated using Eqs. (3.30.12): [Note $I_3 = \alpha\, c = 1$]

$$[\mathbf{B}] = \begin{bmatrix} \alpha^2/r^2 & 0 & 0 \\ 0 & c^2 r^2 & 0 \\ 0 & 0 & 1 \end{bmatrix} = \begin{bmatrix} \alpha^2/r^2 & 0 & 0 \\ 0 & r^2/\alpha^2 & 0 \\ 0 & 0 & 1 \end{bmatrix} \tag{5.37.2}$$

The inverse of **B** can be obtained to be

$$[\mathbf{B}^{-1}] = \begin{bmatrix} r^2/\alpha^2 & 0 & 0 \\ 0 & 1/(c^2 r^2) & 0 \\ 0 & 0 & 1 \end{bmatrix} = \begin{bmatrix} r^2/\alpha^2 & 0 & 0 \\ 0 & \alpha^2/r^2 & 0 \\ 0 & 0 & 1 \end{bmatrix} \tag{5.37.3}$$

The scalar invariants of **B** are

$$I_1 = \frac{\alpha^2}{r^2} + \frac{r^2}{\alpha^2} + 1 = I_2, \qquad I_3 = 1 \tag{5.37.4}$$

We shall use the constitutive equation for a hyperelastic solid for this problem. Thus, from Eq. (5.34.11), we have

$$T_{rr} = -p + \frac{2\alpha^2}{r^2}\frac{\partial A}{\partial I_1} - \frac{2r^2}{\alpha^2}\frac{\partial A}{\partial I_2} \tag{5.37.5a}$$

$$T_{\theta\theta} = -p + 2c^2 r^2 \frac{\partial A}{\partial I_1} - \frac{2}{c^2 r^2} \frac{\partial A}{\partial I_2} \tag{5.37.5b}$$

$$T_{zz} = -p + 2\frac{\partial A}{\partial I_1} - 2\frac{\partial A}{\partial I_2} \tag{5.37.5c}$$

$$T_{r\theta} = T_{rz} = T_{z\theta} = 0 \tag{5.37.5d}$$

The equations of equilibrium are

$$\frac{\partial T_{rr}}{\partial r} + \frac{T_{rr} - T_{\theta\theta}}{r} = 0 \tag{5.37.6a}$$

$$\frac{\partial T_{\theta\theta}}{\partial \theta} = 0 \tag{5.37.6b}$$

$$\frac{\partial T_{zz}}{\partial z} = 0 \tag{5.37.6c}$$

From Eq. (5.37.6b) and (5.37.6c), we have, since $A(I_1(r), I_2(r))$ is function of r only,

$$p = p(r) \tag{5.37.7}$$

Since

$$\frac{dA}{dr} = \frac{\partial A}{\partial I_1}\frac{d I_1}{dr} + \frac{\partial A}{\partial I_2}\frac{d I_2}{dr} = = 2\left(\frac{-\alpha^2}{r^3} + \frac{r}{\alpha^2}\right)\left(\frac{\partial A}{\partial I_1} + \frac{\partial A}{\partial I_2}\right) = -\frac{T_{rr} - T_{\theta\theta}}{r} \tag{i}$$

Thus, from Eq. (5.37.6a), we have

$$\frac{dT_{rr}}{dr} - \frac{dA}{dr} = 0 \tag{ii}$$

and

$$T_{rr} = A(r) + K \tag{5.37.8}$$

Furthermore, Eq. (5.37.6a) and Eq. (5.37.8) give

$$T_{\theta\theta} = r\frac{dT_{rr}}{dr} + T_{rr} = \frac{d}{dr}(rT_{rr}) = \frac{d}{dr}[rA(r)] + K \tag{5.37.9}$$

The boundary conditions are :

$$\text{At } r = r_1, T_{rr} = 0 \quad \text{and at} \quad r = r_2, T_{rr} = 0 \tag{5.37.10}$$

Thus,

$$A(r_1) + K = 0, \quad A(r_2) + K = 0 \tag{iii}$$

so that

$$A(r_1) = A(r_2) \tag{iv}$$

But,

$$A = A(I_1(r), I_2(r)) \tag{v}$$

where

$$I_1 = I_2 = \frac{\alpha^2}{r^2} + \frac{r^2}{\alpha^2} + 1 \tag{vi}$$

therefore

$$\frac{\alpha^2}{r_1^2} + \frac{r_1^2}{\alpha^2} + 1 = \frac{\alpha^2}{r_2^2} + \frac{r_2^2}{\alpha^2} + 1 \tag{vii}$$

or,

$$\alpha^2\left(\frac{1}{r_1^2} - \frac{1}{r_2^2}\right) = \frac{1}{\alpha^2}\left(r_2^2 - r_1^2\right) \tag{viii}$$

which leads to

$$\alpha^2 = r_1 r_2 \tag{5.37.11}$$

The normal force on the end plane $\theta = \pm cb$ is given by (see Eq. (5.37.9) and (i))

$$\int_{r_1}^{r_2} T_{\theta\theta} dr = [rA(r) + Kr]_{r_1}^{r_2} = r_1[A(r_1)+K] - r_2[A(r_2) + K] = 0 \tag{5.37.12}$$

Thus, at the end plane, there is a flexural couple. Let M denotes the flexural couple per unit width, then

$$M = \int_{r_1}^{r_2} r\, T_{\theta\theta} dr = \int_{r_1}^{r_2} \left(r\frac{d(rA)}{dr} + Kr\right) dr$$

$$= r^2 A(r)]_{r_1}^{r_2} - \int_{r_1}^{r_2} rA(r)dr + \frac{Kr^2}{2}]_{r_1}^{r_2} = -Kr_2^2 + Kr_1^2 - \int_{r_1}^{r_2} rA(r)dr + \frac{Kr_2^2}{2} - \frac{Kr_1^2}{2} \tag{5.37.13}$$

i.e.

$$M = \frac{1}{2}K(r_1^2 - r_2^2) - \int_{r_1}^{r_2} rA(r)dr \tag{5.37.14}$$

We note that with $z = Z$, the bar is in a plane strain state.

5.38 Torsion and Tension of an Incompressible Solid Cylinder

Consider the following equilibrium configuration for a circular cylinder

$$r = \lambda_1 R, \quad \theta = \Theta + KZ, \quad z = \lambda_3 Z \qquad \lambda_1^2 \lambda_3 = 1 \tag{5.38.1}$$

where (r, θ, z) are the spatial coordinates and $(R,\Theta,Z)$are the material coordinates for a material point, λ_1 and λ_3 are stretches for elements which were in the radial and axial directions.

The left Cauchy-Green tensor **B** and its inverse can be obtained from Eq. (3.30.8) as

$$[\mathbf{B}] = \begin{bmatrix} \lambda_1^2 & 0 & 0 \\ 0 & \lambda_1^2 + r^2 K^2 & rK\lambda_3 \\ 0 & rK\lambda_3 & \lambda_3^2 \end{bmatrix}, \qquad [\mathbf{B}^{-1}] = \begin{bmatrix} \dfrac{1}{\lambda_1^2} & 0 & 0 \\ 0 & \dfrac{1}{\lambda_1^2} & -Kr \\ 0 & -Kr & \lambda_1^4 + \lambda_1^2 K^2 r^2 \end{bmatrix} \tag{5.38.2}$$

The scalar invariants of **B** are

$$I_1 = 2\lambda_1^2 + r^2 K^2 + \lambda_3^2 = \frac{2}{\lambda_3} + r^2 K^2 + \lambda_3^2, \tag{5.38.3a}$$

$$I_2 = \frac{2}{\lambda_1^2} + \lambda_1^4 \left(1 + \frac{K^2 r^2}{\lambda_1^2}\right) = 2\lambda_3 + \frac{1}{\lambda_3^2}\left(1 + K^2 r^2 \lambda_3\right), \qquad I_3 = 1 \tag{5.38.3b}$$

Now, from the constitutive equation $\mathbf{T} = -p\mathbf{I} + \varphi_1 \mathbf{B} + \varphi_2 \mathbf{B}^{-1}$, we obtain

$$T_{rr} = -p + \varphi_1 \lambda_1^2 + \frac{\varphi_2}{\lambda_1^2} = -p + \frac{\varphi_1}{\lambda_3} + \varphi_2 \lambda_3 \tag{5.38.4a}$$

$$T_{\theta\theta} = -p + \varphi_1(\lambda_1^2 + r^2 K^2) + \frac{\varphi_2}{\lambda_1^2} = \; = -p + \varphi_1\left(\frac{1}{\lambda_3} + r^2 K^2\right) + \varphi_2 \lambda_3 \tag{5.38.4b}$$

$$T_{zz} = -p + \varphi_1 \lambda_3^2 + \varphi_2 (\lambda_1^4 + \lambda_1^2 K^2 r^2) = -p + \varphi_1 \lambda_3^2 + \frac{\varphi_2}{\lambda_3}\left(\frac{1}{\lambda_3} + K^2 r^2\right), \tag{5.38.4c}$$

$$T_{r\theta} = T_{rz} = 0 \tag{5.38.4d}$$

$$T_{\theta z} = K\lambda_3\left(\varphi_1 - \frac{\varphi_2}{\lambda_3}\right)r \tag{5.38.4e}$$

The equations of equilibrium are:

$$\frac{\partial T_{rr}}{\partial r} + \frac{T_{rr} - T_{\theta\theta}}{r} = 0 \tag{5.38.5a}$$

$$\frac{\partial T_{\theta\theta}}{\partial \theta} = 0 \tag{5.38.5b}$$

$$\frac{\partial T_{zz}}{\partial z} = 0 \tag{5.38.5c}$$

Noting that I_1 and I_2 (and therefore φ_1 and φ_2), are functions of r only, we obtain, from the second and the third equations of equilibrium,

$$\frac{\partial p}{\partial \theta} = \frac{\partial p}{\partial z} = 0 \tag{i}$$

That is, p is a function of r only. Thus,

$$p = p(r) \tag{5.38.6}$$

From the first equation of equilibrium, we have

$$r\frac{dT_{rr}}{dr} = -(T_{rr} - T_{\theta\theta}) \tag{ii}$$

The total normal force N on a cross sectional plane is given by

$$N = \int_o^{r_o} T_{zz} 2\pi r dr \tag{5.38.7}$$

To evaluate the integral, we first need to eliminate p from the equation for T_{zz}. This can be done in the following way:

With

$$T_{zz} = -p + \tau_{zz}, \quad T_{rr} = -p + \tau_{rr}, \quad T_{\theta\theta} = -p + \tau_{\theta\theta} \tag{5.38.8}$$

we have

$$\begin{aligned} 2T_{zz} &= -2p + 2\tau_{zz} = (T_{rr} - \tau_{rr}) + (T_{\theta\theta} - \tau_{\theta\theta}) + 2\tau_{zz} \\ &= T_{rr} + T_{\theta\theta} + 2\tau_{zz} - \tau_{rr} - \tau_{\theta\theta} \end{aligned} \tag{iii}$$

Now, in view of Eq. (ii), we have

$$2T_{zz} = 2T_{rr} + r\frac{dT_{rr}}{dr} + 2\tau_{zz} - \tau_{rr} - \tau_{\theta\theta} = \frac{1}{r}\frac{d}{dr}(r^2 T_{rr}) + 2\tau_{zz} - \tau_{rr} - \tau_{\theta\theta} \tag{iv}$$

Thus, from Eq. (5.38.7),

$$N = \pi r^2 T_{rr}\Big]_o^{r_o} + \pi \int_o^{r_o} (2\tau_{zz} - \tau_{rr} - \tau_{\theta\theta})\, r dr \tag{v}$$

With $T_{rr}(r_o) = 0$, we have

$$N = \pi \int_o^{r_o} (2\tau_{zz} - \tau_{rr} - \tau_{\theta\theta})\, r dr \tag{5.38.9}$$

From Eqs. (5.38.4) and (5.38.8), we have

$$2\tau_{zz} - \tau_{rr} - \tau_{\theta\theta} = 2\left(\lambda_3^2 - \frac{1}{\lambda_3}\right)\left(\varphi_1 - \frac{\varphi_2}{\lambda_3}\right) - K^2 r^2 \left(\varphi_1 - \frac{2\varphi_2}{\lambda_3}\right) \tag{vi}$$

Thus,

$$\begin{aligned} N = {} & 2\pi\lambda_3 \left(\lambda_3 - \frac{1}{\lambda_3^2}\right) \int_o^{r_o} \left(\varphi_1 - \frac{\varphi_2}{\lambda_3}\right) r dr \\ & - \pi K^2 \int_o^{r_o} \left(\varphi_1 - \frac{2\varphi_2}{\lambda_3}\right) r^3\, dr \end{aligned} \tag{5.38.10}$$

Since $r = \lambda_1 R$, therefore,

$$r dr = \lambda_1^2 R dR = \frac{1}{\lambda_3} R dR \tag{vii}$$

Thus,

$$\begin{aligned} N = {} & 2\pi \left(\lambda_3 - \frac{1}{\lambda_3^2}\right) \int_o^{R_o} \left(\varphi_1 - \frac{\varphi_2}{\lambda_3}\right) R dR \\ & - \frac{\pi K^2}{\lambda_3^2} \int_o^{R_o} \left(\varphi_1 - \frac{2\varphi_2}{\lambda_3}\right) R^3 dR \end{aligned} \tag{5.38.11}$$

Similarly, the twisting moment can be obtained to be

$$M = \int_o^{r_o} r\, T_{\theta z}\, 2\pi r\, dr = \frac{2\pi K}{\lambda_3} \int_o^{R_o} \left(\varphi_1 - \frac{\varphi_2}{\lambda_3}\right) R^3\, dR \tag{5.38.12}$$

In Eqs. (5.38.11) and (5.38.12) φ_1 and φ_2 are functions of I_1 and I_2 and are therefore functions of R (see Eq. (5.38.3).

If the angle of twist K is very small, then I_1 and I_2 and therefore φ_1 and φ_2 may be regarded as independent of R and the integrals can be integrated to give

$$N = \pi R_o^2 \left(\lambda_3 - \frac{1}{\lambda_3^2}\right) \left(\varphi_1 - \frac{\varphi_2}{\lambda_3}\right) + O(K^2) \tag{5.38.18}$$

and

$$M = \frac{K \pi R_o^4}{\lambda_3 \ 2} \left(\varphi_1 - \frac{\varphi_2}{\lambda_3}\right) + O(K^2) \tag{5.38.19}$$

We see therefore, that if the bar is prevented from extension or contraction (i.e., $\lambda_3 = 1$), then twisting of the bar with a K approaching zero, gives rise to a small axial force N which approaches zero with K^2. On the other hand if the bar is free from axial force (i.e., $N = 0$), then as K approaches zero, there is an axial stretch λ_3 such that (λ_3 -1) approaches zero with K^2. Thus, when a circular bar is twisted with an infinitesimal angle of twist, the axial stretch is negligible as was assumed earlier in the infinitesimal theory.

From Eqs. (5.38.18) and (5.38.19), we can obtain

$$\frac{M}{K} = \frac{R_o^2}{2} \frac{N}{\left(\lambda_3^2 - \frac{1}{\lambda_3}\right)} \tag{5.38.20}$$

Equation (5.38.20) is known as "Rivlin's Universal relation". This equation gives, for small twisting angle, the torsional stiffness as a function of λ_3, the stretch in the axial direction. We see, therefore, that the torsional stiffness can be obtained from a simple-extension experiment which measures N as a function of the axial stretch λ_3.

PROBLEMS

5.1. Show that the null vector is the only isotropic vector.

(Hint: Assume that **a** is an isotropic vector, and use a simple change of basis to equate the primed and the unprimed components)

5.2. Show that the most general isotropic second-order tensor is of the form α **I**, where α is a scalar and **I** is the identity tensor.

5.3. Show that for an anisotropic linear elastic material, the principal directions of stress and strain are usually not coincident.

5.4. If the Lame constants for a material are

$$\lambda = 119.2 \text{ GPa } (17.3\times10^6 \text{ psi}), \quad \mu = 79.2 \text{ GPa } (11.5\times10^6 \text{ psi}),$$

find Young's modulus, Poisson's ratio, and the bulk modulus.

5.5. Given Young's modulus $E_Y = 103$ GPa and Poisson's ratio $\nu = 0.34$, find the Lame constants λ and μ. Also find the bulk modulus.

5.6. Given Young's modulus $E_Y = 193$ GPa and shear modulus $\mu = 76$ GPa, find Poisson's ratio ν, Lame's constant λ and the bulk modulus k

5.7. If the components of strain at a point of structural steel are

$$E_{11} = 36\times10^{-6}, \quad E_{22} = 40\times10^{-6}, \quad E_{33} = 25\times10^{-6}$$

$$E_{12} = 12\times10^{-6}, \quad E_{23} = 0, \quad E_{13} = 30\times10^{-6}$$

find the stress components, $\lambda = 119.2$ GPa(17.3 x 10^6 psi), $\mu = 79.2$ GPa (11.5x10^6 psi).

5.8. Do Problem 5.7 if the strain components are

$$E_{11} = 100\times10^{-6}, \quad E_{22} = -50\times10^{-6}, \quad E_{33} = 200\times10^{-6}$$

$$E_{12} = -100\times10^{-6}, \quad E_{23} = 0, \quad E_{13} = 0$$

5.9. (a) If the state of stress at a point of structural steel is

$$[\mathbf{T}] = \begin{bmatrix} 100 & 42 & 6 \\ 42 & -2 & 0 \\ 6 & 0 & 15 \end{bmatrix} \text{ MPa}$$

what are the strain components? $E_Y = 207$ GPa, $\mu = 79.2$ GPa, $\nu = 0.30$

(b) Suppose that a five centimeter cube of structural steel has a constant state of stress given in part (a). Determine the total change in volume induced by this stress field.

5.10. (a) For the constant stress field below, find the strain components

$$[\mathbf{T}] = \begin{bmatrix} 6 & 2 & 0 \\ 2 & -3 & 0 \\ 0 & 0 & 0 \end{bmatrix} \text{ MPa}$$

(b) Suppose that a sphere of 5 cm radius is under the influence of this stress field, what will be the change in volume of the sphere? Use the elastic constants of Prob.5.9.

5.11. Show that for an incompressible material ($\nu = 1/2$) that

(a)

$$\mu = \frac{E_Y}{3}, \quad \lambda = \infty, \quad k = \infty$$

(b) Hooke's law becomes

$$\mathbf{T} = 2\mu\,\mathbf{E} + \frac{1}{3}(T_{kk})\,\mathbf{I}$$

5.12. Given a function $f(a, b) = ab$ and a motion

$$x_1 = X_1 + k\,(X_1 + X_2)$$
$$x_2 = X_2 + k\,(X_1 - X_2),$$

where $k = 10^{-4}$

(a) Show that $f(X_1, X_2) \approx f(x_1, x_2)$.

(b) Show that

$$\frac{\partial f(x_1, x_2)}{\partial x_1} \approx \frac{\partial f(X_1, X_2)}{\partial X_1}$$

and

$$\frac{\partial f(x_1, x_2)}{\partial x_2} \approx \frac{\partial f(X_1, X_2)}{\partial X_2}$$

5.13. Do the previous problem for $f(a, b) = a^2 + b^2$

5.14. Given the following displacement field

$$u_1 = kX_3X_2, \quad u_2 = kX_3X_1, \quad u_3 = k(X_1^2 - X_2^2), \quad k = 10^{-4}$$

(a) Find the corresponding stress components.

(b) In the absence of body forces, is the state of stress a possible equilibrium stress field?

5.15. Repeat Problem 5.14, except that the displacement components are

$$u_1 = kX_2X_3, \quad u_2 = kX_1X_3, \quad u_3 = kX_1X_2, \quad k = 10^{-4}$$

5.16. Repeat Problem 5.14, except that the displacement components are:

$$u_1 = -kX_3X_2, \quad u_2 = kX_1X_3, \quad u_3 = k\sin X_2, \quad k = 10^{-4}$$

5.17. Calculate the ratio of c_L/c_T for Poisson's ratio equal to $\frac{1}{3}$, 0.49, 0.499

5.18. Assume an arbitrary displacement field that depends only on the field variable x_2 and time t, determine what differential equations the displacement field must satisfy in order to be a possible motion (with zero body force).

5.19. Consider a linear elastic medium. Assume the following form for the displacement field

$$u_1 = \varepsilon\,[\sin\beta(x_3 - ct) + \alpha\sin\beta\,(x_3 + ct)]\,, \quad u_2 = u_3 = 0$$

(a) What is the nature of this elastic wave (longitudinal, transverse, direction of propagation)?

(b) Find the associated strains, stresses and determine under what conditions the equations of motion are satisfied with zero body force.

(c) Suppose that there is a boundary at $x_3 = 0$ that is traction-free. Under what conditions will the above motion satisfy this boundary condition for all time?

(d) Suppose that there is a boundary at $x_3 = l$ that is also traction-free. What further conditions will be imposed on the above motion to satisfy this boundary condition for all time?

5.20. Do the previous problem if the boundary $x_3 = 0$ is fixed (no motion) and $x_3 = l$ is still traction-free.

5.21. Do problem 5.19 if the boundaries $x_3 = 0$ and $x_3 = l$ are both rigidly fixed.

5.22. Do Problem 5.19 if the assumed displacement field is of the form

$$u_3 = \sin\beta\,(x_3 - ct) + \alpha\sin\beta\,(x_3 + ct),$$
$$u_1 = u_2 = 0.$$

5.23. Do Problem 5.22 if the boundary $x_3 = 0$ is fixed(no motion) and $x_3 = l$ is traction-free ($\mathbf{t} = 0$).

5.24. Do Problem 5.22 if the boundary $x_3 = 0$ and $x_3 = l$ are both rigidly fixed.

5.25. Consider an arbitrary displacement field $\mathbf{u} = \mathbf{u}(x_1, t)$.

(a) Show that if the motion is equivoluminal ($\frac{\partial u_i}{\partial x_i} = 0$) that $\mathbf{u}$ must satisfy the equation

$$\mu\,\frac{\partial^2 u_i}{\partial x_j\,\partial x_j} = \rho_o\,\frac{\partial^2 u_i}{\partial t^2}.$$

(b) Show that if the motion is irrotational ($\frac{\partial u_i}{\partial x_j} = \frac{\partial u_j}{\partial x_i}$) that the dilatation $e = \frac{\partial u_i}{\partial x_i}$ must satisfy the equation

$$(2\mu + \lambda)\frac{\partial^2 e}{\partial x_i\,\partial x_i} = \rho_o\,\frac{\partial^2 e}{\partial t^2}.$$

5.26. (a) Write a displacement field for an infinite train of longitudinal waves propagating in the direction $3\,\mathbf{e}_1 + 4\mathbf{e}_2$.

(b) Write a displacement field for an infinite train of transverse waves propagating in the direction $3\,\mathbf{e}_1 + 4\mathbf{e}_2$ and polarized in the $x_1 x_2$ plane.

5.27. Consider a material with Poisson's ratio equal 1/3 and a transverse elastic wave (as in Section 5.10) of amplitude ε_1 and incident on a plane boundary at an angle α_1. Determine the amplitudes and angles of reflection of the reflected waves if

(a) $\alpha_1 = 0$

(b) $\alpha_1 = 15^o$.

5.28. Consider an incident transverse wave on a free boundary as in Section 5.10. For what particular angles of incidence will the only reflected wave be transverse? (Take $\nu = 1/3$).

5.29. Consider a transverse elastic wave incident on a traction-free plane surface and polarized normal to the plane of incidence. Show that the boundary condition can be satisfied with only a reflected transverse wave that is similarly polarized. what is the relation of the amplitudes, wavelengths, and direction of propagation of the incident and reflected wave?

5.30. Consider the problem of Section 5.10 and determine the characteristics of the reflected waves if the boundary $x_2 = 0$ is fixed (no motion). How are the results different from the case of a free boundary.

5.31. A longitudinal elastic wave is incident on a fixed boundary

(a) Show that in general there are two reflected waves, one longitudinal and the other transverse (polarized in plane normal to incident plane).

(b) Find, as in Section 5.10, the amplitude ratio of reflected to incident elastic waves.

5.32. Do the previous problem for a free boundary.

5.33. Verify that the thickness stretch vibration given by Eq. (5.11.3) does satisfy the longitudinal wave equation.

5.34. Do Example 5.11.1 if the right face $x_1 = l$ is free.

5.35. (a) Find the thickness stretch vibration if the $x_1 = 0$ face is being forced by a traction $\mathbf{t} = (\beta \cos \omega t)\mathbf{e}_1$ and the right-hand face $x_1 = l$ is fixed.

(b) Find the resonant frequencies.

5.36. (a) Find the thickness-shear vibration if the left-hand face $x_1 = 0$ has a forced displacement $\mathbf{u} = (\alpha \cos \omega t)\mathbf{e}_3$ and the right-hand face $x_1 = l$ is fixed.

(b) Find the resonant frequencies.

5.37. Do the previous problem if the forced displacement is given by $\mathbf{u} = \alpha\,(\cos \omega t\, \mathbf{e}_2 + \sin \omega t\, \mathbf{e}_3)$. Describe the particle motion throughout the plate.

5.38. Determine the total elongation of a steel bar 76 cm long if the tensile stress is 0.1 GPa and $E_Y = 207$ GPa.

5.39. A cast iron bar, 4 ft (122 cm) long and 1.5 in.(3.81 cm) in diameter is pulled by equal and opposite axial forces P at its ends.

(a) Find the maximum normal and shearing stresses if P = 20,000 lb (89000 N).

(b) Find the total elongation and lateral contraction ($E_Y = 15\times10^6$ psi (103 GPa), $\nu = 0.25$).

5.40. A steel bar ($E_Y = 207$GPa) of 6 cm^2 cross-section and 6 m length is acted on by the indicated (Fig.P5.1) axially applied forces. Find the total elongation of the bar.

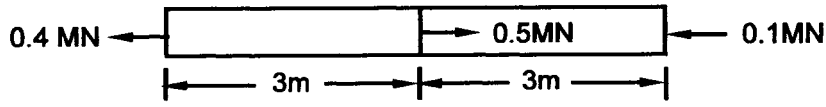

Fig. P5.1

5.41. A steel bar of 10 ft (3.05 m) length is to be designed to carry a tensile load of 100,000 lb (444.8 kN). What should the minimum cross-sectional area be if the maximum shearing stress should not exceed 15,000 psi (103 MPa)and the maximum normal stress should not exceed 20,000 psi (138 MPa)? If it is further required that the elongation should not exceed 0.05 in(0.127 cm), what should the area be?

5.42. Consider a bar of cross-sectional area A that is stretched by a tensile force P at each end.
(a) Determine the normal and shearing stresses on a plane with a normal vector that makes an angle α with the cylindrical axis. For what values of α are the normal and shearing stresses equal?

(b) If the load carrying capacity of the bar is based on the shearing stress on the plane defined by $\alpha = \alpha_o$ remaining less than τ_o, sketch how the maximum load will depend on the angle α_o.

5.43. Consider a cylindrical bar that is acted upon by an axial stress $T_{11} = \sigma$,

(a) What will the state of stress in the bar be if the lateral surface is constrained so that there is no contraction or expansion?

(b) Show that the effective Young's modulus $E_Y' \equiv T_{11}/E_{11}$ is given by

$$E_Y' = \frac{(1-\nu)}{(1-2\nu)(1+\nu)} E_Y.$$

(c) Evaluate the effective modulus for Poisson's ratio equal to 1/3 and 1/2.

5.44. Let the state of stress in a tension specimen be given by $T_{11} = \sigma$, all other $T_{ij} = 0$.

(a) Find the components of the deviatoric stress $\mathbf{T}^o = \mathbf{T} - \frac{1}{3} T_{kk}\mathbf{I}$.

(b) Find the scalar invariants of $\mathbf{T}^o$

5.45. Three identical steel rods support the load P, as shown in Fig.P5.2. How much load does each rod carry? Neglect the weights of the rod and the rigid bar.

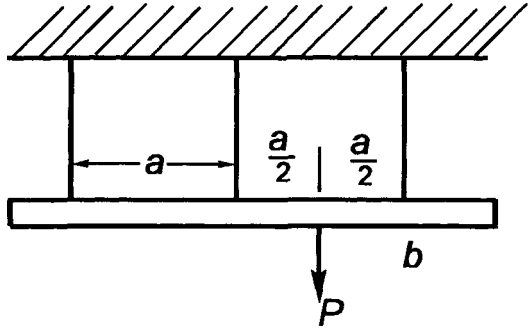

Fig. P5.2

5.46. Solve the previous problem if the cross-sectional area of the middle bar is twice that of the left- and right-hand bars.

5.47. Let the axis of a cylindrical bar be vertical and initially coincide with the x_1 axis. If $x_1 = 0$ corresponds to the lower face, then the body force is given by $\rho\mathbf{B} = -\rho g\mathbf{e}_1$. Assume that the stress distribution induced by the body force alone is of the form

$$T_{11} = \rho g x_1$$

and all other $T_{ij} = 0$.

(a) Show that the stress tensor is a possible state of stress in the presence of the body force mentioned above.

(b) If this possible state of stress is the actual distribution of stress in the cylindrical bar, what surface tractions should act on the lateral face and the pair of end faces in order to produce this state of stress.

5.48. A circular steel shaft is subjected to twisting couples of 2700 N·m. The allowable tensile stress is 0.124 GPa. If the allowable shearing stress is 0.6 times the allowable tensile stress, what is the minimum allowable diameter?

5.49. A circular steel shaft is subjected to twisting couples of 5000 ft-lb (6780 N·m). Determine the shaft diameter if the maximum shear stress is not to exceed 10,000 psi(69 MPa) and the angle of twist is not to exceed 1.5 ^{o} in 20 diameters of length. $\mu = 12\times10^{6}$ psi (82.7 GPa).

5.50. Demonstrate that the elastic solution for the solid circular bar in torsion is also valid for a circular cylindrical tube in torsion. If a is the outside radius and b is the inside radius, how must Eq. (5.13.10) for the twist per unit length be altered?

5.51. In Example 5.13.2, if the radius of the left portion is a_1 and the radius of the right portion is a_2, what is the twisting moment produced in each portion of the shaft? Both shafts are of the same material.

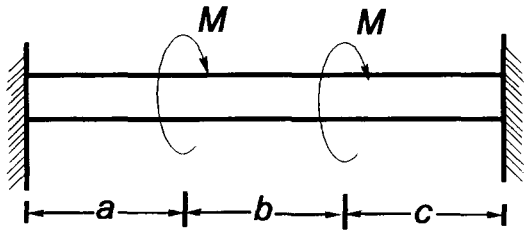

Fig. P5.3

5.52. Solve the previous problem if $a_1 = 3.0$ cm, $a_2 = 2.5$ cm, $l_1 = l_2 = 75$ cm, and $M_t = 700$ N·m.

5.53. For the circular shaft shown in Fig.P5.3, determine the twisting moment produced in each part of the shaft.

5.54. A circular bar of one-inch (2.54 cm) radius is under the action of an axial tensile load of 30,000 lb(133 kN) and a twisting couple of 25,000 in-lbs(2830 N·m).

(a) Determine the stress throughout the bar.

(b) Find the maximum normal and shearing stress that occurs over all locations and all cross-sectional planes throughout the bar.

5.55. Show that for any cylindrical bar of non-circular cross-section in torsion that the stress vector at all points along the lateral boundary acting on any of the normal cross-sectional planes must be tangent to the boundary.

5.56. Demonstrate that the displacement and stress for the elliptic bar in torsion may also be used for an elliptic tube, if the inside boundary is defined by

$$\frac{x_2^2}{a^2} + \frac{x_3^2}{b^2} = k^2$$

where $k<1$.

5.57. Compare the twisting torque which can be transmitted by a shaft with an elliptical cross-section having a major axis equal to twice the minor axis with a shaft of circular cross-section having a diameter equal to the major axis of the elliptical shaft. Both shafts are of the same material. Also compare the unit twist under the same twisting moment.

5.58. Repeat the previous problem, except that the circular shaft has a diameter equal to the minor axis of the elliptical shaft.

5.59. (a) For an elliptic bar in torsion, show that the magnitude of the maximum shearing stress varies linearly along radial lines $x_2 = kx_3$ and reaches a maximum on the outer boundary.

(b) Show that on the boundary the maximum shearing stress is given by

$$(T_s)_{\max} = \frac{2M_t}{\pi a^2 b^3}\sqrt{b^2 + x_3^2(a^2 - b^2)}$$

so that the greatest shearing stress does occur at the end of the minor axis.

5.60. Consider the torsion of a cylindrical bar with an equilateral triangular cross-section as in Fig.P5.4.

(a) Show that a warping function $\varphi = \alpha\,(3x_2^2 x_3 - x_3^3)$ generates an equilibrium stress field.

(b) Determine the constant α in order to satisfy the traction-free lateral boundary condition. Demonstrate that the entire lateral surface is traction-free.

(c) Write out explicitly the stress distribution generated by this warping function. Evaluate the maximum shearing stress at the triangular corners and along the line $x_3 = 0$ in a cross-section. Along the line $x_3 = 0$ where does the greatest shearing stress occur?

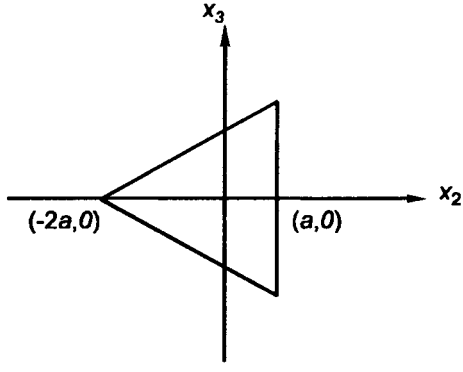

Fig. P5.4

5.61. An alternate manner of formulating the problem of the torsion of a cylinder of noncircular cross-section employs a stress function $\psi\,(x_2, x_3)$ such that the stresses are given by

$$T_{12} = \frac{\partial \psi}{\partial x_3}, \quad T_{13} = -\frac{\partial \psi}{\partial x_2}$$

and all other $T_{ij} = 0$

(a) Demonstrate that the equilibrium equations are identically satisfied for any choice of ψ.

(b) Show that if ψ satisfies the equation

$$\frac{\partial^2 \psi}{\partial x_2^2} + \frac{\partial^2 \psi}{\partial x_3^2} = \text{constant}$$

then the stress will correspond to a compatible strain field for simply-connected cross-sectional areas.

(c) Show that the lateral boundary condition requires that $\nabla\psi$ be in the same direction as the outward normal. In other words, the values of ψ on the outer boundary is a constant.

5.62. A beam of circular cross-section is subjected to pure bending. The magnitude of each end couple is 14,000 N·m. If the maximum normal stress is not to exceed 0.124 GPa, what should be the diameter?

5.63. The rectangular beam of Example 5.15.1 has a width b and a height $1.2b$. If the right-hand couple is given by $\mathbf{M} = 24{,}000\mathbf{e}_2$ ft-lb (32,500 N·m), determine the dimension b in order that the maximum shearing stress does not exceed 600 psi (4.14 MPa).

5.64. Let the beam of Example 5.15.1 be loaded by both the indicated bending moment and a centroidally applied tensile force P. Determine the magnitude of P in order that $T_{11} \geq 0$.

5.65. Verify that if $\varphi\,(x_1, x_2)$ satisfy Eq. (5.16.7), than it does correspond to a compatible strain field.

5.66. Show that if the bending moment applied to a bar in pure bending is not referred to principal axes, then the flexural stress will be

$$T_{11} = \frac{M_2 I_{zz} + M_3 I_{zy}}{I_{zz} I_{yy} - I_{zy}^2} x_3 - \frac{M_3 I_{yy} + M_2 I_{zy}}{I_{zz} I_{yy} - I_{zy}^2} x_2$$

5.67. Figure P5.5 shows the cross-section of a beam subjected to pure bending. If the end couples are given by $\pm 10^4$ N·m, find the maximum normal stress.

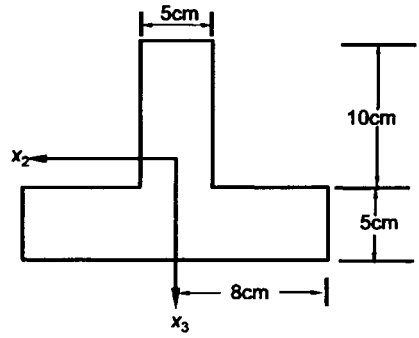

Fig. P5.5

5.68. Consider the stress function

$$\varphi = \alpha_1 x_1^2 + \alpha_2 x_1 x_2 + \alpha_3 x_2^2$$

(a) Verify that this stress function is a possible one for plane strain.

(b) Determine the stresses and sketch the boundary tractions on the rectangular boundary, $x_1 = 0$, $x_1 = a$, $x_2 = 0$, $x_2 = b$.

5.69. Consider the stress function $\varphi = \alpha x_1^2 x_2$

(a) Is this a possible stress function for plane strain?

(b) Determine the stresses.

(c) Determine and sketch the boundary traction on the boundary defined by

$$x_1 = 0, \quad x_1 = a, \quad x_2 = 0, \quad x_2 = b.$$

5.70. Consider the stress function $\varphi = \alpha x_1^4 + \beta x_2^4$.

(a) Is this a possible stress function for plane strain?

(b) Determine and sketch the boundary tractions on the rectangular boundary of the previous problem.

5.71. Consider the stress function $\varphi = \alpha x_1 x_2^2 + \beta x_1 x_2^{\,3}$

(a) Is this a possible stress function for plane strain?

(b) Determine the stresses.

(c) Find the condition necessary for the traction on $x_2 = b$ to vanish and sketch the stress traction on the remaining boundaries $x_2 = 0$, $x_1 = 0$, $x_1 = a$.

5.72. By integration, obtain Eq. (5.17.13)

5.73. From Eqs. (5.19.2), show that Eq. (5.19.4) can also be written as:

$$-M = \int_a^b T_{\theta\theta} r\, h dr$$

$$= \left[-A \ln\frac{b}{a} - B(b^2 \ln b - a^2 \ln a) - C(b^2 - a^2)\right]$$

5.74. Obtain the general solution of Eq. (5.20.6) as

$$f(r) = A r^2 + B r^4 + C\frac{1}{r^2} + D$$

5.75. A hollow sphere is subjected to an internal pressure p_i only.

(a)Show that T_{rr} is always negative (i.e., compressive) and $T_{\theta\theta}$ is always positive (tensile).

(b) Find the maximum $T_{\theta\theta}$.

(c) If the thickness $t \equiv a_o - a_i$ is small, show that the equation obtained in (b) reduces to $\frac{p_i a_o}{2t}$

5.76. Using Eq. (5.16.6) in Eq. (5.16.7) to obtain Eq. (5.16.8).

5.77. Derive Eq. (5.16.9).

5.78. Obtain the solution for the differential equation, Eq. (5.17.8).

5.79. Obtainu_r and u_θ from Eqs. (5.17.11) and (5.17.12).

5.80. Verify Eq. (5.19.4)

5.81. Find the general solution for Eq. (5.20.6)

5.82. Write stress strain laws for a monoclinic elastic solid whose plane of symmetry is the $x_1 x_2$ plane in contracted notation.

5.83. Write stress strain laws for a monoclinic elastic solid whose plane of symmetry is the $x_3 x_1$ plane in contracted notation.

5.84. Verify any one of the equations in Eqs(iv) of Section 5.26 on transversely isotropic elastic solid.

5.85. Show from the equation $C'_{1233} = 0$ that $C_{1133} = C_{2233}$ for a transversely isotropic material [See Section 5.26]

5.86. Referring to Section 5.26, for a transversely isotropic elastic solid, obtain Eq. (ix)

5.87. In Section 5.26 we obtained the reduction in the elastic coefficients for a transversely isotropic elastic solid by demanding that each S_β plane is a plane of material symmetry. We can also obtain the same reduction by demanding that C'_{ijkl} be the same for all β. Verify that the two procedures lead to the same elastic coefficients.

5.88. Verify the relations between C_{ij} and the engineering constants given in Eqs. (5.29.2a)

5.89. Obtain Eq. (5.29.3) from Eq. (5.29.2)

5.90. Derive the inequalities expressed in Eq. (5.30.4)

5.91. Write down all the restrictions for the engineering constants for a monoclinic elastic solid.

5.92. Show that if a tensor is objective, then its inverse is also objective.

5.93. Show that the rate of deformation tensor $\mathbf{D} = \frac{1}{2}[(\nabla \mathbf{v}) + (\nabla \mathbf{v})^T]$ is objective

5.94. Show that in a change of frame, the spin tensor $\mathbf{W}$ transforms in accordance with the equation $\mathbf{W}^* = \mathbf{Q}\mathbf{W}\mathbf{Q}^T + \dot{\mathbf{Q}}\mathbf{Q}^T$

5.95. Show that the material derivative of an objective tensor $\mathbf{T}$ is in general non-objective

5.96. The second Rivlin-Ericksen tensor is defined by

$$\mathbf{A}_2 = \dot{\mathbf{A}}_1 + \mathbf{A}_1(\nabla \mathbf{v}) + (\nabla \mathbf{v})^T \mathbf{A}_1$$

where $\mathbf{A}_1 = 2\mathbf{D}$ [See Prob. 5.93]. Show that $\mathbf{A}_2$ is objective.

5.97. The Jaumann derivative of a second order tensor $\mathbf{T}$ is

$$\dot{\mathbf{T}} + \mathbf{T}\mathbf{W} - \mathbf{W}\mathbf{T}$$

where $\mathbf{W}$ is the spin tensor [see Prob. 5.94]. Show that the Jaumann derivative of $\mathbf{T}$ is objective.

5.98. In a change of frame, how does the first Piola-Kirchhoff stress tensor transform ?

5.99. In a change of frame, how does the second Piola-Kirchhoff tensor transform?

5.100. (a) Starting from the assumption that

$$\mathbf{T} = \mathbf{H}(\mathbf{F})$$

and

$$\mathbf{T}^* = \mathbf{H}^*(\mathbf{F}^*),$$

show that in order that the constitutive equation be independent of observers, we must have

$$\mathbf{Q}\mathbf{T}\mathbf{Q}^T = \mathbf{H}(\mathbf{Q}\mathbf{F})$$

(b) Choose $\mathbf{Q} = \mathbf{R}^T$ to obtain

$$\mathbf{T} = \mathbf{R}\,\mathbf{H}(\mathbf{U})\mathbf{R}^T$$

where $\mathbf{R}$ is the rotation tensor associated with the deformation gradient $\mathbf{F}$ and $\mathbf{U}$ is the right stretch tensor.

(c) Show that

$$\tilde{\mathbf{T}} = \mathbf{h}(\mathbf{U})$$

where

$$\mathbf{h} = \mathbf{U}\mathbf{H}(\mathbf{U})\mathbf{U}^T$$

Since $\mathbf{C} = \mathbf{U}^2$, therefore we may write

$$\tilde{\mathbf{T}} = \mathbf{f}(\mathbf{C})$$