4

Stress

In the previous chapter, we considered the purely kinematical description of the motion of a continuum without any consideration of the forces that cause the motion and deformation. In this chapter, we shall consider a means of describing the forces in the interior of a body idealized as a continuum. It is generally accepted that matter is formed of molecules which in turn consists of atoms and subatomic particles. Therefore, the internal forces in real matter are those between the above particles. In the classical continuum theory the internal forces are introduced through the concept of body forces and surface forces. Body forces are those that act throughout a volume (e.g., gravity, electrostatic force) by a long-range interaction with matter or charge at a distance. Surface forces are those that act on a surface (real or imagined) separating parts of the body. We shall assume that it is adequate to describe the surface force at a point of a surface through the definition of a **stress vector**, discussed in Section 4.1, which pays no attention to the curvature of the surface at the point. Such an assumption is known as **Cauchy's stress principle** which is one of the basic axioms of classical continuum mechanics.

4.1 Stress Vector

Let us consider a body depicted in Fig. 4.1. Imagine a plane such as S, which passes through an arbitrary internal point P and which has a unit normal vector $\mathbf{n}$. The plane cuts the body into two portions. One portion lies on the side of the arrow of $\mathbf{n}$ (designated by II in the figure) and the other portion on the tail of $\mathbf{n}$ (designated by I). Considering portion I as a free body, there will be on plane S a resultant force $\Delta\mathbf{F}$ acting on a small area ΔA containing P. We define the stress vector (from II to I) at the point P on the plane S as the limit of the ratio $\Delta\mathbf{F}/\Delta A$ as $\Delta A \to 0$. That is, with $\mathbf{t_n}$ denoting the stress vector,

$$\mathbf{t_n} = \lim_{\Delta A \to 0} \frac{\Delta\mathbf{F}}{\Delta A} \tag{4.1.1}$$

If portion II is considered as a free body, then by Newton's law of action and reaction, we shall have a stress vector (from I to II), $\mathbf{t}_{-\mathbf{n}}$ at the same point on the same plane equal and opposite to that given by Eq. (4.1.1). That is,

$$\mathbf{t_n} = -\mathbf{t}_{-\mathbf{n}} \tag{4.1.2}$$

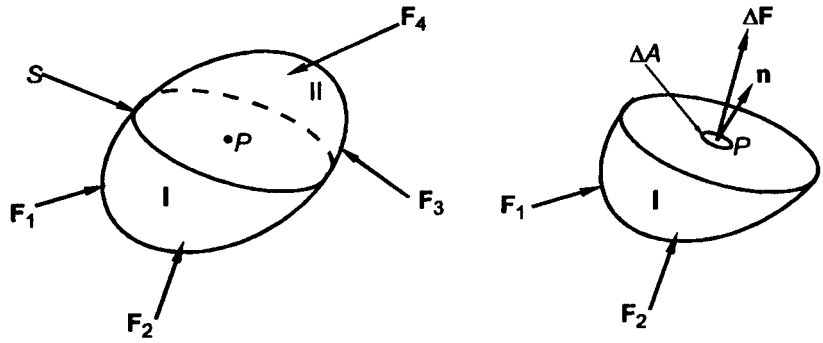

Fig. 4.1

Next, let S be a surface (instead of a plane) passing the point P. Let $\Delta\mathbf{F}$ be the resultant force on a small area ΔS on the surface S. The **Cauchy stress vector** at P on S is defined as

$$\mathbf{t} = \lim_{\Delta S \to 0} \frac{\Delta \mathbf{F}}{\Delta S} \tag{4.1.3}$$

We now state the following principle, known as the **Cauchy's stress principle**: The stress vector at any given place and time has a common value on all parts of material having a common tangent plane at P and lying on the same side of it. In other words, if $\mathbf{n}$ is the unit outward normal (i.e., a vector of unit length pointing outward away from the material) to the tangent plane, then

$$\mathbf{t} = \mathbf{t}(\mathbf{x}, t, \mathbf{n}) \tag{4.1.4}$$

where the scalar t denotes time.

In the following section, we shall show from Newton's second law that this dependence on $\mathbf{n}$ can be expressed as

$$\mathbf{t}(\mathbf{x}, t, \mathbf{n}) = \mathbf{T}(\mathbf{x}, t)\mathbf{n} \tag{4.1.5}$$

where $\mathbf{T}$ is a linear transformation.

4.2 Stress Tensor

According to Eq. (4.1.4) of the previous section, the stress vector on a plane passing through a given spatial point $\mathbf{x}$ at a given time t depends only on the unit normal vector $\mathbf{n}$ to the plane. Thus, let $\mathbf{T}$ be the transformation such that

$$\mathbf{t}_{\mathbf{n}} = \mathbf{T}\mathbf{n} \tag{4.2.1}$$

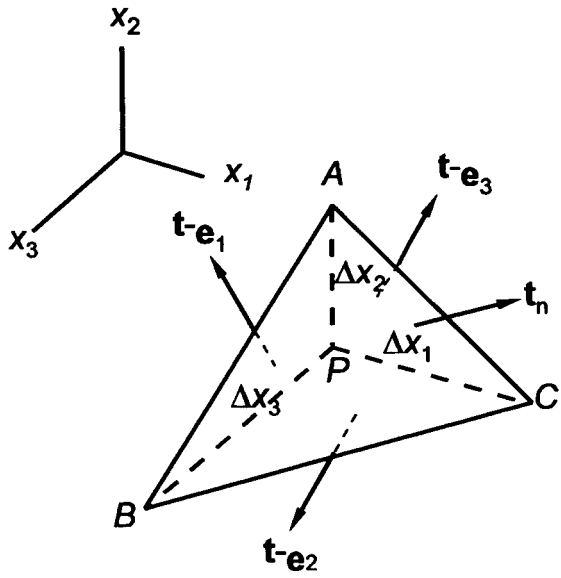

Fig. 4.2

Let a small tetrahedron be isolated from the body with the point P as one of its vertices (see Fig. 4.2). The size of the tetrahedron will ultimately be made to approach zero volume so that, in the limit, the inclined plane will pass through the point P. The outward normal to the face PAB is $-\mathbf{e}_1$. Thus, the stress vector on this face is denoted by $\mathbf{t}_{-\mathbf{e}_1}$ and the force on the face is

$$\mathbf{t}_{-\mathbf{e}_1}\Delta A_1$$

where ΔA_1 is the area of PAB. Similarly, the forces acting on PBC, PAC and the inclined face ABC are

$$\mathbf{t}_{-\mathbf{e}_2}\Delta A_2, \quad \mathbf{t}_{-\mathbf{e}_3}\Delta A_3$$

and

$$\mathbf{t}_{\mathbf{n}}\,\Delta A_n$$

respectively. Thus, from Newton's second law written for the tetrahedron, we have

$$\Sigma\mathbf{F} = \mathbf{t}_{-\mathbf{e}_1}(\Delta A_1)+\mathbf{t}_{-\mathbf{e}_2}(\Delta A_2)+\mathbf{t}_{-\mathbf{e}_3}(\Delta A_3)+\mathbf{t}_{\mathbf{n}}(\Delta A_n) = m\mathbf{a} \tag{i}$$

Since the mass m = (density)(volume), and the volume of the tetrahedron is proportional to the product of three infinitesimal lengths, (in fact, the volume equals to $(1/6)\Delta x_1\Delta x_2\Delta x_3$), when the size of the tetrahedron approaches zero, the right hand side of Eq. (i) will approach zero

faster than the terms on the left where the stress vectors are multiplied by areas, the product of two infinitesimal lengths. Thus, in the limit, the acceleration term drops out exactly from Eq. (i) (We note also that any body force e.g. weight that is acting will be of the same order of magnitude as that of the acceleration term and will also drop out). Thus,

$$\mathbf{t}_{-\mathbf{e}_1}(\Delta A_1)+\mathbf{t}_{-\mathbf{e}_2}(\Delta A_2)+\mathbf{t}_{-\mathbf{e}_3}(\Delta A_3)+\mathbf{t}_{\mathbf{n}}(\Delta A_n) = \mathbf{0} \tag{ii}$$

Let the unit normal vector of the inclined plane ABC be

$$\mathbf{n} = n_1\mathbf{e}_1+n_2\mathbf{e}_2+n_3\mathbf{e}_3 \tag{4.2.2}$$

The areas $\Delta A_1, \Delta A_2$, and ΔA_3, being the projections of ΔA_n are related to ΔA_n by

$$\Delta A_1 = n_1\Delta A_n, \quad \Delta A_2 = n_2\Delta A_n, \quad \Delta A_3 = n_3\Delta A_n \tag{4.2.3}$$

Using Eq. (4.2.3), Eq. (ii) becomes

$$\mathbf{t}_{-\mathbf{e}_1}n_1+\mathbf{t}_{-\mathbf{e}_2}n_2+\mathbf{t}_{-\mathbf{e}_3}n_3+\mathbf{t}_{\mathbf{n}} = \mathbf{0} \tag{4.2.4}$$

But from the law of action and reaction,

$$\mathbf{t}_{-\mathbf{e}_1} = -\mathbf{t}_{\mathbf{e}_1}, \quad \mathbf{t}_{-\mathbf{e}_2} = -\mathbf{t}_{\mathbf{e}_2}, \quad \mathbf{t}_{-\mathbf{e}_3} = -\mathbf{t}_{\mathbf{e}_3} \tag{iii}$$

Thus, Eq. (4.2.4) becomes

$$\mathbf{t}_{\mathbf{n}} = n_1\mathbf{t}_{\mathbf{e}_1}+n_2\mathbf{t}_{\mathbf{e}_2}+n_3\mathbf{t}_{\mathbf{e}_3} \tag{4.2.5}$$

Now, using Eq. (4.2.2) and Eq. (4.2.5), Eq. (4.2.1) becomes

$$\mathbf{T}(n_1\mathbf{e}_1+n_2\mathbf{e}_2+n_3\mathbf{e}_3) = n_1\mathbf{T}\mathbf{e}_1+n_2\mathbf{T}\mathbf{e}_2+n_3\mathbf{T}\mathbf{e}_3 \tag{4.2.6}$$

That is , the transformation $\mathbf{T}$ defined by

$$\mathbf{t}_{\mathbf{n}} = \mathbf{T}\,\mathbf{n} \tag{4.2.7}$$

is a linear transformation [see Eq. (2B1.2)]. It is called the **stress tensor**, or **Cauchy stress tensor.**

4.3 Components of Stress Tensor

According to Eq. (4.2.7) of the previous section, the stress vectors $\mathbf{t}_{\mathbf{e}_i}$ on the three coordinate planes (the $\mathbf{e}_i$-planes) are related to the stress tensor $\mathbf{T}$ by

$$\mathbf{t}_{\mathbf{e}_1} = \mathbf{T}\mathbf{e}_1, \quad \mathbf{t}_{\mathbf{e}_2} = \mathbf{T}\mathbf{e}_2, \quad \mathbf{t}_{\mathbf{e}_3} = \mathbf{T}\mathbf{e}_3 \tag{4.3.1}$$

By the definition of the components of a tensor, Eq. (2B2.1b), we have

$$\mathbf{T}\mathbf{e}_i = T_{mi}\mathbf{e}_m \tag{4.3.2}$$

Thus,

$$\mathbf{t}_{\mathbf{e}_1} = T_{11}\mathbf{e}_1 + T_{21}\mathbf{e}_2 + T_{31}\mathbf{e}_3 \tag{4.3.3a}$$

$$\mathbf{t}_{\mathbf{e}_2} = T_{12}\mathbf{e}_1 + T_{22}\mathbf{e}_2 + T_{32}\mathbf{e}_3 \tag{4.3.3b}$$

$$\mathbf{t}_{\mathbf{e}_3} = T_{13}\mathbf{e}_1 + T_{23}\mathbf{e}_2 + T_{33}\mathbf{e}_3 \tag{4.3.3c}$$

Since $\mathbf{t}_{\mathbf{e}_1}$ is the stress vector acting on the plane whose outward normal is $\mathbf{e}_1$, it is clear from Eq. (4.3.3a) that T_{11} is its normal component and T_{21} and T_{31} are its tangential components. Similarly, T_{22} is the normal component on the $\mathbf{e}_2$-plane and T_{12}, T_{32} are the tangential components on the same plane, etc.

We note that for each stress component T_{ij}, the second index j indicates the plane on which the stress component acts and the first index indicates the direction of the component; e.g., T_{12} is the stress component in the direction of $\mathbf{e}_1$ acting on the plane whose outward normal is in the direction of $\mathbf{e}_2$. We also note that positive **normal stresses** are also known as **tensile stresses** and negative normal stresses as **compressive stresses**. Tangential stresses are also known as shearing stresses. Both T_{21} and T_{31} are shearing stress components acting on the *same* plane (the $\mathbf{e}_1$-plane), thus the resultant shearing stress on this plane is given by

$$\boldsymbol{\tau}_1 = T_{21}\mathbf{e}_2 + T_{31}\mathbf{e}_3 \tag{4.3.4a}$$

the magnitude of this shearing stress is given by

$$|\boldsymbol{\tau}_1| = \sqrt{T_{21}^2 + T_{31}^2}$$

Similarly, on $\mathbf{e}_2$-plane

$$\boldsymbol{\tau}_2 = T_{12}\mathbf{e}_1 + T_{32}\mathbf{e}_3 \tag{4.3.4b}$$

and on $\mathbf{e}_3$-plane

$$\boldsymbol{\tau}_3 = T_{13}\mathbf{e}_1 + T_{23}\mathbf{e}_2 \tag{4.3.4c}$$

From $\mathbf{t} = \mathbf{T}\mathbf{n}$, the components of $\mathbf{t}$ are related to those of $\mathbf{T}$ and $\mathbf{n}$ by the equation

$$t_i = T_{ij}n_j \tag{4.3.5a}$$

Or, in a form more convenient for computations,

$$[\mathbf{t}] = [\mathbf{T}][\mathbf{n}] \tag{4.3.5b}$$

Thus, it is clear that if the matrix of $\mathbf{T}$ is known, the stress vector $\mathbf{t}$ on any inclined plane is uniquely determined from Eq. (4.3.5b). In other words, the state of stress at a point is completely characterized by the stress tensor $\mathbf{T}$. Also since $\mathbf{T}$ is a second-order tensor, any one matrix of $\mathbf{T}$ determines the other matrices of $\mathbf{T}$, see Section 2B13 of Chapter 2.

We should also note that some authors use the convention $\mathbf{t} = \mathbf{T}^T\mathbf{n}$ so that $\mathbf{t}_{\mathbf{e}_i} = T_{ij}\mathbf{e}_j$. Under that convention, for example, T_{21} and T_{23} are tangential components of the stress vector on the plane whose normal is $\mathbf{e}_2$ etc. These differences in meaning regarding the nondiagonal elements of $\mathbf{T}$ disappear if the stress tensor $\mathbf{T}$ is symmetric.

4.4 Symmetry of Stress Tensor- Principle of Moment of Momentum

By the use of moment of momentum equation for a differential element, we shall now show that the stress tensor is generally a symmetric tensor†.

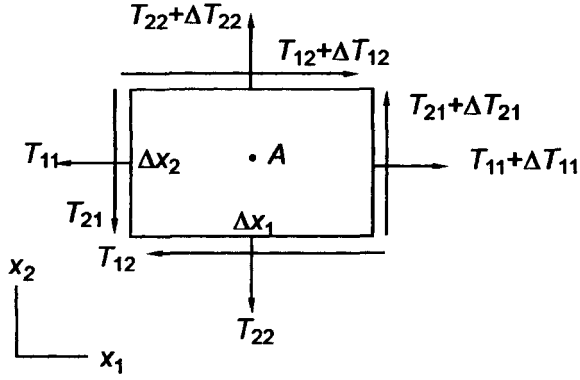

Fig. 4.3

Consider the free-body diagram of a differential parallelepiped isolated from a body as shown in Fig. 4.3. Let us find the moment of all the forces about an axis passing through the center point A and parallel to the x_3-axis:

$$\Sigma(M_A)_3 = T_{21}(\Delta x_2)(\Delta x_3)\left(\frac{\Delta x_1}{2}\right) + (T_{21}+\Delta T_{21})(\Delta x_2)(\Delta x_3)\left(\frac{\Delta x_1}{2}\right)$$
$$-T_{12}(\Delta x_1)(\Delta x_3)\left(\frac{\Delta x_2}{2}\right) - (T_{12}+\Delta T_{12})(\Delta x_1)(\Delta x_3)\left(\frac{\Delta x_2}{2}\right) \qquad \text{(i)}$$

In writing Eq. (i) we have assumed the absence of body moments.

Dropping the terms containing small quantities of higher order, we obtain

† See Prob. 4.27 for a case where the stress tensor is not symmetric

$$\Sigma(M_A)_3 = (T_{21} - T_{12})\Delta x_1 \Delta x_2 \Delta x_3 \tag{ii}$$

Now, whether the elements is in static equilibrium or not, $\Sigma(M_A)_3$ is equal to zero because the angular acceleration term is proportional to the moment of inertia which is given by (1/12) (density) $(\Delta x_1 \Delta x_2 \Delta x_3)[(\Delta x_1)^2 + (\Delta x_2)^2]$ and is therefore a small quantity of higher order than the right side of Eq. (ii). Thus,

$$T_{12} = T_{21} \tag{4.4.1a}$$

Similarly, one can obtain

$$T_{13} = T_{31} \tag{4.4.1b}$$

and

$$T_{23} = T_{32} \tag{4.4.1c}$$

These equations state that the stress tensor is symmetric, i.e., $\mathbf{T} = \mathbf{T}^T$. Therefore, there are only six independent stress components.

Example 4.4.1

The state of stress at a certain point is $\mathbf{T} = -p\mathbf{I}$, where p is a scalar. Show that there is no shearing stress on any plane containing this point.

Solution. The stress vector on any plane passing through the point with normal $\mathbf{n}$ is

$$\mathbf{t} = \mathbf{T}\mathbf{n} = -p\mathbf{I}\mathbf{n} = -p\mathbf{n}$$

Therefore, it is normal to the plane. This simple stress state is called a **hydrostatic state of stress.**

Example 4.4.2

With reference to an xyz coordinate system, the matrix of a state of stress at a certain point of a body is given by:

$$[\mathbf{T}] = \begin{bmatrix} 2 & 4 & 3 \\ 4 & 0 & 0 \\ 3 & 0 & -1 \end{bmatrix} \text{ MPa} \tag{i}$$

(a) Find the stress vector and the magnitude of the normal stress on a plane that passes through the point and is parallel to the plane

$$x + 2y + 2z - 6 = 0$$

(b) If

$$\mathbf{e}_1' = \frac{1}{3}(2\mathbf{e}_1+2\mathbf{e}_2+\mathbf{e}_3)$$

and

$$\mathbf{e}_2' = \frac{1}{\sqrt{2}}(\mathbf{e}_1-\mathbf{e}_2)$$

find T'_{12}.

Solution. (a) The plane $x+2y+2z-6 = 0$ has a unit normal $\mathbf{n}$ given by

$$\mathbf{n} = \frac{1}{3}(\mathbf{e}_1+2\mathbf{e}_2+2\mathbf{e}_3) \tag{ii}$$

The stress vector is obtained from Eq. (4.2.7) as

$$[\mathbf{t}] = [\mathbf{T}][\mathbf{n}] = \frac{1}{3}\begin{bmatrix} 2 & 4 & 3 \\ 4 & 0 & 0 \\ 3 & 0 & -1 \end{bmatrix}\begin{bmatrix} 1 \\ 2 \\ 2 \end{bmatrix} = \frac{1}{3}\begin{bmatrix} 16 \\ 4 \\ 1 \end{bmatrix} \tag{iii}$$

or,

$$\mathbf{t} = \frac{1}{3}(16\mathbf{e}_1+4\mathbf{e}_2+\mathbf{e}_3)\ \text{MPa} \tag{iv}$$

The magnitude of the normal stress is simply, with $T_n \equiv T_{(n)(n)}$,

$$T_n = \mathbf{t}\cdot\mathbf{n} = \frac{1}{9}(16+8+2) = 2.89\ \text{MPa} \tag{v}$$

(b) To find the primed components of the stress, we have,

$$T'_{12} = \mathbf{e}_1'\cdot\mathbf{T}\mathbf{e}_2' = \frac{1}{3\sqrt{2}}[2, 2, 1]\begin{bmatrix} 2 & 4 & 3 \\ 4 & 0 & 0 \\ 3 & 0 & -1 \end{bmatrix}\begin{bmatrix} 1 \\ -1 \\ 0 \end{bmatrix} \tag{vi}$$

Therefore,

$$T'_{12} = \frac{7}{3\sqrt{2}} = 1.65\ \text{MPa} \tag{vii}$$

Example 4.4.3

The distribution of stress inside a body is given by the matrix

$$\begin{bmatrix} -p+\rho gy & 0 & 0 \\ 0 & -p+\rho gy & 0 \\ 0 & 0 & -p+\rho gy \end{bmatrix} \tag{i}$$

where p, ρ and g are constants. Figure 4.4 shows a rectangular block inside the body.

(a) What is the distribution of the stress vector on the six faces of the block?

(b) Find the total resultant force acting on the faces $y = 0$ and $x = 0$.

Solution. (a) We have, from $\mathbf{t} = \mathbf{Tn}$,

$$\begin{aligned}
&\text{on } x = 0, \ [\mathbf{n}] = [-1,\ 0,\ 0], \quad [\mathbf{t}] = [p-\rho gy,\ 0,\ 0] \\
&\text{on } x = a, \ [\mathbf{n}] = [+1,\ 0,\ 0], \quad [\mathbf{t}] = [-p+\rho gy,\ 0\ ,0] \\
&\text{on } y = 0, \ [\mathbf{n}] = [0,\ -1,\ 0], \quad [\mathbf{t}] = [0,\ p,\ 0] \\
&\text{on } y = b, \ [\mathbf{n}] = [0,\ +1,\ 0], \quad [\mathbf{t}] = [0,\ -p+\rho gb,\ 0] \qquad \text{(ii)} \\
&\text{on } z = 0, \ [\mathbf{n}] = [0,\ 0,\ -1], \quad [\mathbf{t}] = [0,\ 0,\ p-\rho gy] \\
&\text{on } z = c, \ [\mathbf{n}] = [0,\ 0,\ +1], \quad [\mathbf{t}] = [0,\ 0,\ -p+\rho gy]
\end{aligned}$$

A section of the distribution of the stress vector is shown in Fig. 4.5.

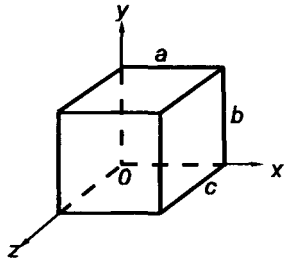

Fig.4.4

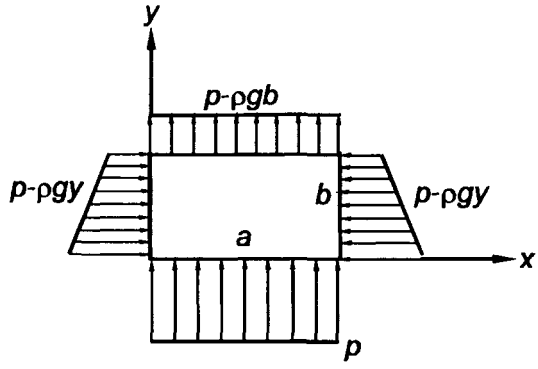

Fig.4.5

(b) On the face $y = 0$, the total force is

$$\mathbf{F}_1 = \int \mathbf{t}dA = (p\int dA)\mathbf{e}_2 = pac\mathbf{e}_2 \qquad \text{(iii)}$$

On the face $x = 0$, the total force is

$$\mathbf{F}_2 = [\int (p-\rho gy)dA]\mathbf{e}_1 = [p\int dA - \rho g\int ydA]\mathbf{e}_1 \qquad \text{(iv)}$$

The second integral can be evaluated directly by replacing (dA) by (cdy) and integrating from $y = 0$ to $y = b$. Or since $\int ydA$ is the first moment of the face area about the z-axis, it is therefore equal to the product of the centroidal distance and the total area. Thus,

$$\mathbf{F}_2 = \left[pbc - \frac{\rho gb^2c}{2}\right]\mathbf{e}_1 \qquad \text{(v)}$$

4.5 Principal Stresses

From Sect. 2B18, we know that for any symmetric stress tensor **T**, there exists at least three mutually perpendicular principal directions (the eigenvectors of **T**). The planes having these directions as their normals are known as the **principal planes.** On these planes, the stress vector is normal to the plane (i.e., no shearing stresses) and the normal stresses are known as the **principal stresses.** Thus, the principal stresses (eigenvalues of **T**) include the maximum and the minimum values of normal stresses among all planes passing through a given point.

The principal stresses are to be obtained from the characteristic equation of **T**, which may be written:

$$\lambda^3 - I_1\lambda^2 + I_2\lambda - I_3 = 0 \tag{4.5.1}$$

where

$$I_1 = T_{11} + T_{22} + T_{33} \tag{4.5.2a}$$

$$I_2 = \begin{vmatrix} T_{11} & T_{12} \\ T_{21} & T_{22} \end{vmatrix} + \begin{vmatrix} T_{11} & T_{13} \\ T_{31} & T_{33} \end{vmatrix} + \begin{vmatrix} T_{22} & T_{23} \\ T_{32} & T_{33} \end{vmatrix} \tag{4.5.2b}$$

$$I_3 = \det[\mathbf{T}] \tag{4.5.2c}$$

are the three principal scalar invariants of the stress tensor. For the computations of the principal directions, we refer the reader to Sect. 2B17.

4.6 Maximum Shearing Stress

In this section, we show that the maximum shearing stress is equal to one-half the difference between the maximum and the minimum principal stresses and acts on the plane that bisects the right angle between the directions of the maximum and minimum principal stresses.

Let $\mathbf{e}_1$, $\mathbf{e}_2$ and $\mathbf{e}_3$ be the principal directions of **T** and let T_1, T_2, T_3 be the principal stresses. If $\mathbf{n} = n_1\mathbf{e}_1 + n_2\mathbf{e}_2 + n_3\mathbf{e}_3$ is the unit normal to a plane, the components of the stress vector on the plane is given by

$$\begin{bmatrix} t_1 \\ t_2 \\ t_3 \end{bmatrix} = \begin{bmatrix} T_1 & 0 & 0 \\ 0 & T_2 & 0 \\ 0 & 0 & T_3 \end{bmatrix} \begin{bmatrix} n_1 \\ n_2 \\ n_3 \end{bmatrix} = \begin{bmatrix} n_1T_1 \\ n_2T_2 \\ n_3T_3 \end{bmatrix} \tag{4.6.1a}$$

i.e.,

$$\mathbf{t} = n_1T_1\mathbf{e}_1 + n_2T_2\mathbf{e}_2 + n_3T_3\mathbf{e}_3 \tag{4.6.1b}$$

and the normal stress on the same plane is given by

$$T_n = \mathbf{n}\cdot\mathbf{t} = n_1^2T_1 + n_2^2T_2 + n_3^2T_3 \tag{4.6.2}$$

Thus, if T_s denotes the magnitude of the total shearing stress on the plane, we have (see Fig. 4.6)

$$T_s^2 = |\mathbf{t}|^2 - T_n^2 \tag{4.6.3}$$

i.e.,

$$T_s^2 = T_1^2 n_1^2 + T_2^2 n_2^2 + T_3^2 n_3^2 - (T_1 n_1^2 + T_2 n_2^2 + T_3 n_3^2)^2 \tag{4.6.4}$$

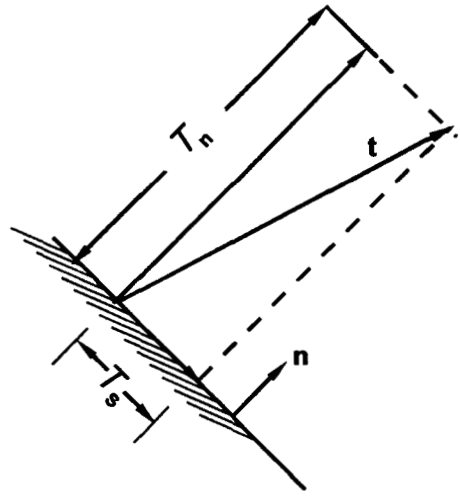

Fig. 4.6

For known values of T_1, T_2, and T_3, Eq. (4.6.4) states that T_s^2 is a function of n_1, n_2. and n_3, i.e.,

$$T_s^2 = f(n_1, n_2, n_3) \tag{4.6.5}$$

We wish to find the triple (n_1, n_2, n_3) for which f attains a maximum. However,

$$n_1^2 + n_2^2 + n_3^2 = 1 \tag{4.6.6}$$

thus, we are looking for a maximum for the value of the function $f(n_1, n_2, n_3)$ subjected to the constraint that $n_1^2 + n_2^2 + n_3^2 = 1$.

Taking the total derivative of Eq. (4.6.5), we obtain

$$d(T_s^2) = \frac{\partial T_s^2}{\partial n_1} dn_1 + \frac{\partial T_s^2}{\partial n_2} dn_2 + \frac{\partial T_s^2}{\partial n_3} dn_3 = 0 \tag{i}$$

If dn_1, dn_2, and dn_3 can vary independently of one another, then Eq. (i) gives the familiar condition for the determination of the triple (n_1,n_2,n_3) for the stationary value of T_s^2

$$\frac{\partial T_s^2}{\partial n_1} = 0, \quad \frac{\partial T_s^2}{\partial n_2} = 0, \text{ and } \frac{\partial T_s^2}{\partial n_3} = 0$$

But the dn_1,dn_2 and dn_3 can not vary independently. Indeed, taking the total derivative of Eq. (4.6.6), i.e., $n_1^2+n_2^2+n_3^2 = 1$. we obtain

$$n_1dn_1+n_2dn_2+n_3dn_3 = 0 \tag{ii}$$

If we let

$$\frac{\partial T_s^2}{\partial n_1} = \lambda n_1 \tag{iii}$$

$$\frac{\partial T_s^2}{\partial n_2} = \lambda n_2 \tag{iv}$$

and

$$\frac{\partial T_s^2}{\partial n_3} = \lambda n_3 \tag{v}$$

then by substituting Eqs. (iii) (iv) and (v) into Eq. (i), we see clearly that Eq. (i) is satisfied if Eq. (4.6.6) is enforced. Thus, Eqs. (iii), (iv), (v) and (4.6.6) are four equations for the determination of the four unknown values of n_1, n_2, n_3 and λ which correspond to stationary values of T_s^2. This is the Lagrange multiplier method and the parameter λ is known as the Lagrange multiplier (whose value is however of little interest).

Computing the partial derivatives from Eq. (4.6.4), Eqs. (iii), (iv), and (v) become

$$2n_1[T_1^2-2(T_1n_1^2+T_2n_2^2+T_3n_3^2)T_1] = n_1\lambda \tag{vi}$$

$$2n_2[T_2^2-2(T_1n_1^2+T_2n_2^2+T_3n_3^2)T_2] = n_2\lambda \tag{vii}$$

$$2n_3[T_3^2-2(T_1n_1^2+T_2n_2^2+T_3n_3^2)T_3] = n_3\lambda \tag{viii}$$

From Eqs. (vi), (vii), (viii) and (4.6.6), the following stationary points (n_1,n_2,n_3) can be obtained (The procedure is straight forward, but the detail is somewhat tedious, we leave it as an exercise.) :

$$(1,0,0), \quad (0,1,0), \quad (0,0,1) \tag{ix}$$

$$\left(\frac{1}{\sqrt{2}}, \pm\frac{1}{\sqrt{2}}, 0\right), \left(\frac{1}{\sqrt{2}}, 0, \pm\frac{1}{\sqrt{2}}\right), \left(0, \frac{1}{\sqrt{2}}, \pm\frac{1}{\sqrt{2}}\right) \tag{x}$$

The planes determined by the solutions given by Eq. (ix) are nothing but the principal planes, on which $T_s = 0$. Thus, on these planes the values of T_s^2 is a minimum (in fact, zero).

The values of T_s^2 on the planes given by the solutions (x) are easily obtained from Eq. (4.6.4) to be the following:

$$\text{for } \mathbf{n} = \frac{1}{\sqrt{2}}\mathbf{e}_1 \pm \frac{1}{\sqrt{2}}\mathbf{e}_2, \quad T_s^2 = \frac{(T_1 - T_2)^2}{4} \tag{4.6.5}$$

$$\text{for } \mathbf{n} = \frac{1}{\sqrt{2}}\mathbf{e}_1 \pm \frac{1}{\sqrt{2}}\mathbf{e}_3, \quad T_s^2 = \frac{(T_1 - T_3)^2}{4} \tag{4.6.6}$$

and

$$\text{for } \mathbf{n} = \frac{1}{\sqrt{2}}\mathbf{e}_2 \pm \frac{1}{\sqrt{2}}\mathbf{e}_3, \quad T_s^2 = \frac{(T_2 - T_3)^2}{4} \tag{4.6.7}$$

Thus, the maximum magnitude of the shearing stress is given by the largest of the three values

$$\frac{|T_1 - T_2|}{2}, \quad \frac{|T_1 - T_3|}{2}, \quad \text{and} \quad \frac{|T_2 - T_3|}{2}$$

In other words,

$$(T_s)_{\max} = \frac{(T_n)_{\max} - (T_n)_{\min}}{2} \tag{4.6.8}$$

where $(T_n)_{\max}$ and $(T_n)_{\min}$ are the largest and the smallest normal stress respectively. It can also be shown that on the plane of maximum shearing stress, the normal stress is

$$T_n = \frac{[(T_n)_{\max} + (T_n)_{\min}]}{2} \tag{4.6.9}$$

Example 4.6.1

If the state of stress is such that the components T_{13}, T_{23}, T_{33} are equal to zero, then it is called a state of plane stress.

(a) For plane stress, find the principal values and the corresponding principal directions.

(b) Determine the maximum shearing stress.

Solution. (a) For the stress matrix

$$[\mathbf{T}] = \begin{bmatrix} T_{11} & T_{12} & 0 \\ T_{12} & T_{22} & 0 \\ 0 & 0 & 0 \end{bmatrix} \tag{i}$$

the characteristic equation has the form

$$\lambda[\lambda^2-(T_{11}+T_{22})\lambda+(T_{11}T_{22}-T_{12}^2)] = 0 \tag{ii}$$

Therefore $\lambda = 0$ is an eigenvalue and its direction is obviously $\mathbf{n} = \mathbf{e}_3$. The remaining eigenvalues are

$$\begin{cases} T_1 \\ T_2 \end{cases} = \frac{T_{11}+T_{22}\pm\sqrt{(T_{11}-T_{22})^2+4T_{12}^2}}{2} \tag{4.6.10}$$

To find the corresponding eigenvectors, we set $(T_{ij}-\lambda\delta_{ij})n_j = 0$ and obtain for either $\lambda = T_1$ or T_2,

$$(T_{11}-\lambda)n_1+T_{12}n_2 = 0 \tag{iii}$$

$$T_{12}n_1+(T_{22}-\lambda)n_2 = 0 \tag{iv}$$

$$-\lambda n_3 = 0 \tag{v}$$

The third equation gives $n_3 = 0$. Let the eigenvector $\mathbf{n} = \cos\theta\mathbf{e}_1+\sin\theta\mathbf{e}_2$ (see Fig. 4.7). Then, from the first equation

$$\tan\theta = \frac{n_2}{n_1} = -\frac{T_{11}-\lambda}{T_{12}} \tag{4.6.11}$$

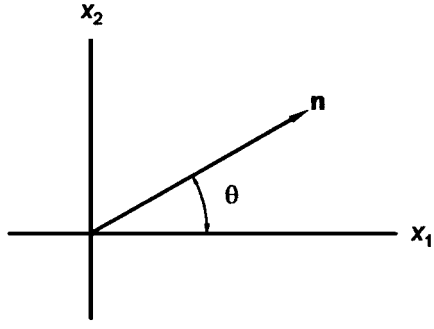

Fig. 4.7

(b) Since the third eigenvalue is always zero, the maximum shearing stress will be the greatest of the value

$$\frac{|T_1|}{2}, \quad \frac{|T_2|}{2}$$

and

$$\left|\frac{T_1-T_2}{2}\right| = \frac{\sqrt{(T_{11}-T_{22})^2+4T_{12}^2}}{2} \tag{4.6.12}$$

Example 4.6.2

Do the previous example for the following state of stress: $T_{12} = T_{21} = 1000$ MPa, all other T_{ij} are zero.

Solution. From Eq. (4.6.10), we have

$$\begin{cases} T_1 \\ T_2 \end{cases} = \pm\frac{\sqrt{(4)(1000)^2}}{2} = \pm 1000 \text{ MPa} \tag{i}$$

Corresponding to the maximum normal stress $T_1 = 1000$ MPa, Eq. (4.6.11) gives

$$\tan\theta_1 = -\frac{0-1000}{1000} = +1, \text{ i.e., } \theta_1 = 45^o$$

and corresponding to the minimum normal stress $T_2 = -1000$ MPa, (i.e., maximum compressive stress),

$$\tan\theta_2 = -\frac{0-(-1000)}{1000} = -1, \text{ i.e., } \theta_2 = -45^o$$

The maximum shearing stress is given by

$$(T_s)_{\max} = \frac{1000-(-1000)}{2} = 1000 \text{ MPa}$$

which acts on the planes bisecting the planes of maximum and minimum normal stresses, i.e., the $\mathbf{e}_1$−plane and the $\mathbf{e}_2$−plane in this problem.

4.7 Equations of Motion - Principle of Linear Momentum

In this section, we derive the differential equations of motion for any continuum in motion. The basic postulate is that each particle of the continuum must satisfy Newton's law of motion.

Fig. 4.8 shows the stress vectors that are acting on the six faces of a small rectangular element that is isolated from the continuum in the neighborhood of the position designated by x_i.

Let $\mathbf{B} = B_i\mathbf{e}_i$ be the body force (such as weight) per unit mass, ρ be the mass density at x_i and $\mathbf{a}$ the acceleration of a particle currently at the position x_i ; then Newton's law of motion takes the form, valid in rectangular Cartesian coordinate systems

$$\left[\left(\frac{\mathbf{t}_{\mathbf{e}_1}(x_1+\Delta x_1,x_2,x_3)-\mathbf{t}_{\mathbf{e}_1}(x_1,x_2,x_3)}{\Delta x_1}\right)\right] + \left(\frac{\mathbf{t}_{\mathbf{e}_2}(x_1,x_2+\Delta x_2,x_3)-\mathbf{t}_{\mathbf{e}_2}(x_1,x_2,x_3)}{\Delta x_1}\right)$$

$$\left[\left(\frac{\mathbf{t}_{\mathbf{e}_3}(x_1,x_2,x_3+\Delta x_3)-\mathbf{t}_{\mathbf{e}_3}(x_1,x_2,x_3)}{\Delta x_1}\right)\right]\Delta x_1\Delta x_2\Delta x_3+\rho\mathbf{B}\Delta x_1\Delta x_2\Delta x_3$$

$$= (\rho\mathbf{a})\Delta x_1\Delta x_2\Delta x_3 \tag{i}$$

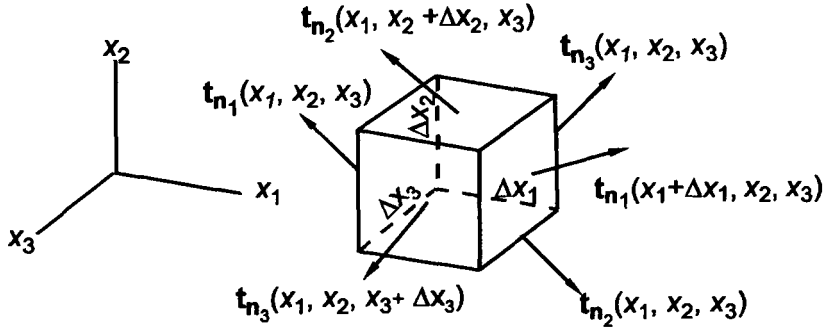

Fig. 4.8

Dividing by $\Delta x_1, \Delta x_2, \Delta x_3$ and letting $\Delta x_i \to 0$, we have

$$\frac{\partial \mathbf{t}_{\mathbf{e}_1}}{\partial x_1}+\frac{\partial \mathbf{t}_{\mathbf{e}_2}}{\partial x_2}+\frac{\partial \mathbf{t}_{\mathbf{e}_3}}{\partial x_3}+\rho\mathbf{B} = \rho\mathbf{a} \tag{4.7.1}$$

Since $\mathbf{t}_{\mathbf{e}_i} = \mathbf{T}\mathbf{e}_i = T_{ji}\,\mathbf{e}_j$, therefore we have (noting that all $\mathbf{e}_i$ are of fixed directions in Cartesian coordinates)

$$\frac{\partial T_{ij}}{\partial x_j}\mathbf{e}_i+\rho B_i\mathbf{e}_i = \rho a_i\mathbf{e}_i \tag{ii}$$

In invariant form, the above equation can be written

$$\mathrm{div}\mathbf{T}+\rho\mathbf{B} = \rho\mathbf{a} \tag{4.7.2a}$$

and in Cartesian component form

$$\frac{\partial T_{ij}}{\partial x_j}+\rho B_i = \rho a_i \tag{4.7.2b}$$

These are the equations that must be satisfied for any continuum in motion, whether it be solid or fluid. They are called **Cauchy's equations of motion.** If the acceleration vanishes, then Eq. (4.7.2) reduces to the **equilibrium equations**

$$\text{div}\mathbf{T}+\rho\mathbf{B} = 0 \tag{4.7.3a}$$

or,

$$\frac{\partial T_{ij}}{\partial x_j}+\rho B_i = 0 \tag{4.7.3b}$$

Example 4.7.1

In the absence of body forces, does the stress distribution

$$T_{11} = x_2^2+\nu(x_1^2-x_2^2),\quad T_{12} = -2\nu x_1x_2$$
$$T_{22} = x_1^2+\nu(x_2^2-x_1^2),\quad T_{23} = T_{13} = 0$$
$$T_{33} = \nu(x_1^2+x_2^2) \tag{i}$$

where $\nu$is a constant, satisfy the equations of equilibrium?

Solution. Writing the first(i = 1) equilibrium equation, we have

$$\frac{\partial T_{1j}}{\partial x_j} = \frac{\partial T_{11}}{\partial x_1}+\frac{\partial T_{12}}{\partial x_2}+\frac{\partial T_{13}}{\partial x_3} = 2\nu x_1-2\nu x_1+0 = 0 \tag{ii}$$

Similarly, for i = 2, we have

$$\frac{\partial T_{2j}}{\partial x_j} = \frac{\partial T_{21}}{\partial x_1}+\frac{\partial T_{22}}{\partial x_2}+\frac{\partial T_{23}}{\partial x_3} = -2\nu x_2+2\nu x_2+0 = 0 \tag{iii}$$

and for i = 3

$$\frac{\partial T_{3j}}{\partial x_j} = \frac{\partial T_{31}}{\partial x_1}+\frac{\partial T_{32}}{\partial x_2}+\frac{\partial T_{33}}{\partial x_3} = 0+0+0 = 0 \tag{iv}$$

Therefore, the given stress distribution does satisfy the equilibrium equations

---

Example 4.7.2

Write the equations of motion if the stress components have the form $T_{ij} = -p\delta_{ij}$ where $p = p(x_1,x_2,x_3,t)$

Solution. Substituting the given stress distribution in the first term on the left-hand side of Eq. (4.7.3b), we obtain

$$\frac{\partial T_{ij}}{\partial x_j} = -\frac{\partial p}{\partial x_j}\delta_{ij} = -\frac{\partial p}{\partial x_i} \tag{i}$$

Therefore,

$$-\frac{\partial p}{\partial x_i}+\rho B_i = \rho a_i \tag{4.7.4a}$$

or,

$$-\nabla p+\rho \mathbf{B} = \rho \mathbf{a} \tag{4.7.4b}$$

4.8 Equations of Motion in Cylindrical and Spherical Coordinates

In Chapter 2, we presented the components of div**T** in cylindrical and in spherical coordinates. Using those formulas, we have the following equations of motion: [See also Prob. 4.34]

Cylindrical coordinates

$$\frac{\partial T_{rr}}{\partial r}+\frac{1}{r}\frac{\partial T_{r\theta}}{\partial \theta}+\frac{T_{rr}-T_{\theta\theta}}{r}+\frac{\partial T_{rz}}{\partial z}+\rho B_r = \rho a_r \tag{4.8.1a}$$

$$\frac{\partial T_{\theta r}}{\partial r}+\frac{1}{r}\frac{\partial T_{\theta\theta}}{\partial \theta}+\frac{2T_{\theta r}}{r}+\frac{\partial T_{\theta z}}{\partial z}+\frac{T_{r\theta}-T_{\theta r}}{r}+\rho B_\theta = \rho a_\theta \tag{4.8.1b}$$

$$\frac{\partial T_{zr}}{\partial r}+\frac{1}{r}\frac{\partial T_{z\theta}}{\partial \theta}+\frac{T_{zr}}{r}+\frac{\partial T_{zz}}{\partial z}+\rho B_\theta = \rho a_z \tag{4.8.1c}$$

We note that for symmetric stress tensor, $T_{r\theta}-T_{\theta r}=0$.

Example 4.8.1

The stress field for the Kelvin's problem (an infinite elastic space loaded by a concentrated load at the origin) is given by the following stress components in cylindrical coordinates

$$T_{rr} = \frac{Az}{R^3} - \frac{3r^2z}{R^5},\quad T_{\theta\theta} = \frac{Az}{R^3},\quad T_{zz} = -\left[\frac{Az}{R^3} + \frac{3z^3}{R^5}\right]$$

$$T_{rz} = -\left[\frac{Ar}{R^3} + \frac{3rz^2}{R^5}\right],\quad T_{z\theta} = T_{r\theta} = 0 \tag{i}$$

where

$$R^2 = r^2 + z^2 \tag{ii}$$

and A is a constant. Verify that the given state of stress is in equilibrium in the absence of body forces.

Solution. From $R^2 = r^2 + z^2$, we obtain

$$\frac{\partial R}{\partial r} = \frac{r}{R}, \quad \frac{\partial R}{\partial z} = \frac{z}{R} \tag{iii}$$

Thus,

$$\begin{aligned} \frac{\partial T_{rr}}{\partial r} &= -\frac{3Azr}{R^5} - \frac{6rz}{R^5} + \frac{15r^3z}{R^7} \\ \frac{T_{rr} - T_{\theta\theta}}{r} &= -\frac{3rz}{R^5} \\ \frac{\partial T_{rz}}{\partial z} &= \frac{3Azr}{R^5} - \frac{6rz}{R^5} + \frac{15rz^3}{R^7} \end{aligned} \tag{iv}$$

Thus, the left hand side of Eq. (4.8.1a) becomes, with $B_r = 0$

$$-\frac{15rz}{R^5} + \frac{15rz}{R^7}(r^2 + z^2) = -\frac{15rz}{R^5} + \frac{15rz}{R^5} = 0$$

In other words, the r-equation of equilibrium is satisfied.

Since $T_{r\theta} = T_{\theta z} = 0$ and $T_{\theta\theta}$ is independent of θ, therefore, with $B_\theta = a_\theta = 0$, the second equation of equilibrium is also satisfied.

The third equation of equilibrium Eq. (4.8.1c) with $B_z = a_z = 0$ can be similarly verified. [see Prob. 4.35].

Spherical coordinates

$$\frac{1}{r^2}\frac{\partial(r^2T_{rr})}{\partial r} + \frac{1}{r\sin\theta}\frac{\partial(T_{r\theta}\sin\theta)}{\partial\theta} + \frac{1}{r\sin\theta}\frac{\partial T_{r\phi}}{\partial\phi} - \frac{T_{\theta\theta}+T_{\phi\phi}}{r} + \rho B_r = \rho a_r \tag{4.8.2a}$$

$$\frac{1}{r^3}\frac{\partial(r^3T_{\theta r})}{\partial r} + \frac{1}{r\sin\theta}\frac{\partial(T_{\theta\theta}\sin\theta)}{\partial\theta} + \frac{1}{r\sin\theta}\frac{\partial T_{\theta\phi}}{\partial\phi} - \frac{T_{\phi\phi}\cot\theta}{r} + \frac{T_{r\theta}-T_{\theta r}}{r} + \rho B_\theta = \rho a_\theta \tag{4.8.2b}$$

$$\frac{1}{r^3}\frac{(\partial r^3T_{\phi r})}{\partial r} + \frac{1}{r\sin\theta}\frac{\partial(T_{\phi\theta}\sin\theta)}{\partial\theta} + \frac{1}{r\sin\theta}\frac{\partial T_{\phi\phi}}{\partial\phi} + \frac{T_{\theta\phi}\cot\theta}{r} + \frac{T_{r\phi}-T_{\phi r}}{r} + \rho B_\phi = \rho a_\phi \tag{4.8.2c}$$

Again, we note that for symmetric stress tensor, $T_{r\theta} - T_{\theta r} = 0$ and $T_{r\phi} - T_{\phi r} = 0$.

4.9 Boundary Condition for the Stress Tensor

If on the boundary of some body there are applied distributive forces, we call them **surface tractions.** We wish to find the relation between the surface tractions and the stress field that is defined within the body.

If we consider an infinitesimal tetrahedron cut from the boundary of a body with its inclined face coinciding with the boundary surface (Fig. 4.9), then as in Section 4.1, we obtain

$$\mathbf{t} = \mathbf{T}\mathbf{n} \tag{4.9.1}$$

where **n** is the unit outward normal vector to the boundary, **T** is the stress tensor evaluated at the boundary and **t** is the force vector per unit area on the boundary. Equation (4.9.1) is called the stress boundary condition.

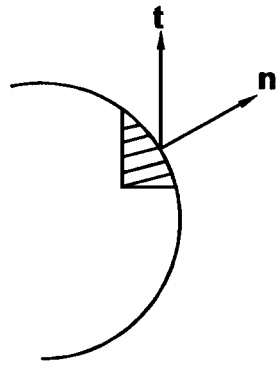

Fig. 4.9

Example 4.9.1

Given that the stress field in a thick wall elastic cylinder is

$$T_{rr} = A + \frac{B}{r^2}, \quad T_{\theta\theta} = A - \frac{B}{r^2}, \quad T_{zz} = \text{constant}$$

$$T_{r\theta} = T_{rz} = T_{\theta z} = 0 \tag{i}$$

where A and B are constants.

(a) Verify that the given state of stress satisfies the equations of equilibrium in the absence of body forces.

(b) Find the stress vector on a cylindrical surface $r = a$.

(c) If the surface traction on the inner surface $r = r_i$ is a uniform pressure p_i and the outer surface $r = r_o$ is free of surface traction, find the constants A and B.

Solution.

(a) We have, $$\frac{\partial T_{rr}}{\partial r} = -\frac{2B}{r^3}, \quad \frac{T_{rr} - T_{\theta\theta}}{r} = \frac{2B}{r^3} \tag{ii}$$

The above results, together with $T_{r\theta} = T_{rz} = 0$, give a value of zero for the left hand side of Eq. (4.8.1a) in the absence of a body force component. Thus, the r-equation of equilibrium is satisfied. Also, by inspection, one easily sees that Eq. (4.8.1b) and Eq. (4.8.1c) are satisfied when $B_\theta = B_z = a_\theta = a_z = 0$.

(b) The unit normal vector to the cylindrical surface is $\mathbf{n} = \mathbf{e}_r$, thus the stress vector is given by

$$\begin{bmatrix} t_r \\ t_\theta \\ t_z \end{bmatrix} = \begin{bmatrix} T_{rr} & T_{r\theta} & T_{rz} \\ T_{\theta r} & T_{\theta\theta} & T_{\theta z} \\ T_{zr} & T_{z\theta} & T_{zz} \end{bmatrix} \begin{bmatrix} 1 \\ 0 \\ 0 \end{bmatrix} = \begin{bmatrix} T_{rr} \\ T_{\theta r} \\ T_{zr} \end{bmatrix} \tag{iii}$$

i.e.,

$$\mathbf{t} = T_{rr}\mathbf{e}_r + T_{\theta r}\mathbf{e}_\theta + T_{zr}\mathbf{e}_z = \left(A + \frac{B}{a^2}\right)\mathbf{e}_r \tag{iv}$$

The boundary conditions are

$$\text{At } r = r_i, \quad \mathbf{t} = -p_i\mathbf{e}_r \tag{v}$$

and

$$\text{at } r = r_o, \quad \mathbf{t} = 0 \tag{vi}$$

Thus,

$$A + \frac{B}{r_i^2} = -p_i \tag{vii}$$

$$A + \frac{B}{r_o^2} = 0 \tag{viii}$$

Eqs. (vii) and (viii) give

$$A = \frac{p_i r_i^2}{(r_o^2 - r_i^2)}, \quad B = -\frac{p_i r_i^2 r_o^2}{(r_o^2 - r_i^2)} \tag{ix}$$

thus,

$$T_{rr} = \frac{p_i r_i^2}{r_o^2 - r_i^2}\left(1 - \frac{r_o^2}{r^2}\right), \qquad T_{\theta\theta} = \frac{p_i r_i^2}{r_o^2 - r_i^2}\left(1 + \frac{r_o^2}{r^2}\right) \tag{x}$$

Example 4.9.2

It is known that the equilibrium stress field in an elastic spherical shell under the action of external and internal pressure in the absence of body forces is of the form

$$T_{rr} = A - \frac{2B}{r^3}, \quad T_{\theta\theta} = T_{\phi\phi} = A + \frac{B}{r^3}$$
$$T_{\theta r} = T_{\phi r} = T_{\phi\phi} = 0 \tag{i}$$

(a) Verify that the stress field satisfies the equations of equilibrium in the absence of body forces.

(b) Find the stress vector on spherical surface $r=a$.

(c) Determine A and B if the inner surface of the shell is subjected to a uniform pressure p_i and the outer surface is free of surface traction.

Solution.

(a)

$$r^2 T_{rr} = Ar^2 - \frac{2B}{r}, \qquad \frac{1}{r^2}\frac{\partial}{\partial r}(r^2 T_{rr}) = \frac{2A}{r} + \frac{2B}{r^4} \tag{ii}$$

$$\frac{T_{\theta\theta} + T_{\phi\phi}}{r} = \frac{2A}{r} + \frac{2B}{r^4} \tag{iii}$$

Thus, Eq. (4.8.2a) is satisfied when $B_r = a_r = 0$, Eqs. (4.8.2b) and (4.8.2c) can be similarly verified. [see Prob.4.38].

(b) The unit normal vector to the spherical surface is $\mathbf{n} = \mathbf{e}_r$, thus the stress vector is given by

$$\begin{bmatrix} t_r \\ t_\theta \\ t_\phi \end{bmatrix} = \begin{bmatrix} T_{rr} & T_{r\theta} & T_{r\phi} \\ T_{\theta r} & T_{\theta\theta} & T_{\theta\phi} \\ T_{\phi r} & T_{\phi\theta} & T_{\phi\phi} \end{bmatrix} \begin{bmatrix} 1 \\ 0 \\ 0 \end{bmatrix} = \begin{bmatrix} T_{rr} \\ T_{\theta r} \\ T_{\phi r} \end{bmatrix} \tag{iv}$$

i.e.,

$$\mathbf{t} = T_{rr}\mathbf{e}_r + T_{\theta r}\mathbf{e}_\theta + T_{\phi r}\mathbf{e}_\phi = \left(A - \frac{2B}{a^2}\right)\mathbf{e}_r \tag{v}$$

(c)The boundary conditions are

$$\text{At } r = r_i, \quad T_{rr} = -p_i \tag{vi}$$

$$\text{At } r = r_o, \quad T_{rr} = 0 \tag{vii}$$

Thus,

$$A - \frac{2B}{r_i^3} = -p_i \tag{viii}$$

$$A - \frac{2B}{r_o^3} = 0 \tag{ix}$$

From Eqs. (viii) and (ix), we obtain

$$A = \frac{p_i r_i^3}{r_o^3 - r_i^3} \qquad B = \frac{p_i r_o^3 r_i^3}{2(r_o^3 - r_i^3)}. \tag{x}$$

Thus,

$$T_{rr} = \frac{p_i r_i^3}{r_o^3 - r_i^3}\left(1 - \frac{r_o^3}{r^3}\right) \qquad T_{\theta\theta} = \frac{p_i r_i^3}{r_o^3 - r_i^3}\left(1 + \frac{r_o^3}{2r^3}\right) \tag{xi}$$

4.10 Piola Kirchhoff Stress Tensors

Let dA_o be the differential material area with unit normal $\mathbf{n_o}$ at the reference time t_o and dA that at the current time t of the same material area with unit normal $\mathbf{n}$. We may refer to dA_o as the *undeformed area* and dA as the *deformed area*. Let $\mathbf{df}$ be the force acting on the deformed area $dA\mathbf{n}$. In Section 4.1, we defined the Cauchy stress vector $\mathbf{t}$ and the associated Cauchy stress tensor $\mathbf{T}$ based on the deformed area $dA\mathbf{n}$, that is

$$\mathbf{df} = \mathbf{t}dA \tag{4.10.1}$$

and

$$\mathbf{t} = \mathbf{Tn} \tag{4.10.2}$$

In this section, we define two other pairs of (pseudo) stress vectors and tensors, based on the *undeformed* area.

(A) **The First Piola-Kirchhoff Stress Tensor**

Let

$$\mathbf{df} \equiv \mathbf{t}_o dA_o \tag{4.10.3}$$

The stress vector $\mathbf{t}_o$, defined by the above equation is a pseudo-stress vector in that, being based on the undeformed area, it does no describe the actual intensity of the force. We note however, that $\mathbf{t}_o$ has the same direction as the Cauchy stress vector $\mathbf{t}$.

The **first Piola-Kirchhoff stress tensor** (also known as the **Lagrangian Stress tensor**) is a linear transformation $\mathbf{T}_o$ such that

$$\mathbf{t}_o = \mathbf{T}_o\mathbf{n}_o \tag{4.10.4}$$

The relation between the first Piola-Kirchhoff stress tensor and the Cauchy stress tensor can be obtained as follows:

Since

$$\mathbf{df} = \mathbf{t}\,dA = \mathbf{t}_o dA_o \tag{i}$$

therefore

$$\mathbf{t}_o = \frac{dA}{dA_o}\mathbf{t} \tag{ii}$$

Using Eqs. (4.10.2) and (4.10.4), Eq. (ii) becomes

$$\mathbf{T}_o\mathbf{n}_o = \left(\frac{dA}{dA_o}\right)\mathbf{Tn} = \frac{\mathbf{T}dA\mathbf{n}}{dA_o} \tag{iii}$$

Using Eq. (3.28.6), i.e.,

$$dA\mathbf{n} = dA_o(det\mathbf{F})(\mathbf{F}^{-1})^T\mathbf{n}_o \tag{4.10.5}$$

we have,

$$\mathbf{T}_o\mathbf{n}_o = \mathbf{T}(\det\mathbf{F})(\mathbf{F}^{-1})^T\mathbf{n}_o \tag{iv}$$

The above equation is to be true for all $\mathbf{n}_o$, therefore,

$$\mathbf{T}_o = (\det\mathbf{F})\mathbf{T}(\mathbf{F}^{-1})^T \tag{4.10.6a}$$

This is the desired relationship.

In Cartesian components, Eq. (4.10.6a) reads

$$(T_o)_{ij} = (\det\mathbf{F})T_{im}F^{-1}jm \tag{4.10.6b}$$

From Eq. (4.10.6a), we obtain

$$\mathbf{T} = \frac{1}{\det\mathbf{F}}\mathbf{T}_o\mathbf{F}^T \tag{4.10.7a}$$

which in Cartesian components , reads

$$T_{ij} = \frac{1}{\det \mathbf{F}}(T_o)_{im}F_{jm} \tag{4.10.7b}$$

We note that when Cartesian coordinates are used for both the reference and the current configuration, $F_{im} = \dfrac{\partial x_i}{\partial X_m}$ and $F_{im}^{-1} = \dfrac{\partial X_i}{\partial x_m}$.

We also note that the first Piola-Kirchhoff stress tensor is in general not symmetric.

(B) The Second Piola-Kirchhoff Stress Tensor

Let

$$\tilde{\mathbf{df}} = \tilde{\mathbf{t}}dA_o \tag{4.10.8a}$$

where

$$\mathbf{df} = \mathbf{F}\tilde{\mathbf{df}} \tag{4.10.8b}$$

In Eq. (4.10.8b), $\tilde{\mathbf{df}}$ is the (pseudo) differential force which transforms, under the deformation gradient $\mathbf{F}$ into the (actual) differential force $\mathbf{df}$ at the deformed position (one may compare the transformation equation $\mathbf{df} = \mathbf{F}\tilde{\mathbf{df}}$ with $d\mathbf{x} = \mathbf{F}d\mathbf{X}$); thus, the pseudo vector $\tilde{\mathbf{t}}$ is in general in a different direction than that of the Cauchy stress vector $\mathbf{t}$.

The second Piola-Kirchhoff stress tensor is a linear transformation $\tilde{\mathbf{T}}$ such that

$$\tilde{\mathbf{t}} = \tilde{\mathbf{T}}\mathbf{n}_o \tag{4.10.9}$$

where we recall $\mathbf{n}_o$ is the normal to the undeformed area. From Eqs. (4.10.8a) (4.10.8b) and (4.10.9). we have

$$\mathbf{df} = \mathbf{F}\,\tilde{\mathbf{T}}\mathbf{n}_o dA_o \tag{i}$$

We also have (see Eqs. (4.10.3) and (4.10.4)

$$\mathbf{df} = \mathbf{t}_o dA_o = \mathbf{T}_o\mathbf{n}_o dA_o \tag{ii}$$

Comparing Eqs. (i) and (ii), we have

$$\tilde{\mathbf{T}} = \mathbf{F}^{-1}\mathbf{T}_o \tag{4.10.10}$$

Equation (4.10.10) gives the relationship between the first Piola-Kirchhoff stress tensor $\mathbf{T}_0$ and the second Piola-Kirchhoff stress tensor $\tilde{\mathbf{T}}$. Now, from Eqs. (4.10.6a) and (4.10.10), one easily obtain the relationship between the second Piola-Kirchhoff stress tensor and the Cauchy stress tensor $\mathbf{T}$ as

$$\tilde{\mathbf{T}} = (\det \mathbf{F})\mathbf{F}^{-1}\mathbf{T}(\mathbf{F}^{-1})^T \tag{4.10.11}$$

We note that the second Piola-Kirchhoff stress tensor is always a symmetric tensor if the Cauchy stress tensor is a symmetric one.

Example 4.10.1

The deformed configuration of a body is described by

$$x_1 = 4X_1, \quad x_2 = -\frac{1}{2}X_2, \quad x_3 = -\frac{1}{2}X_3 \tag{i}$$

If the Cauchy stress tensor for this body is

$$\begin{bmatrix} 100 & 0 & 0 \\ 0 & 0 & 0 \\ 0 & 0 & 0 \end{bmatrix} \text{MPa}$$

(a) What is the corresponding first Piola-Kirchhoff stress tensor.

(b) What is the corresponding second Piola-Kirchhoff stress tensor.

Solution. From Eqs. (i), we have

$$[\mathbf{F}] = \begin{bmatrix} 4 & 0 & 0 \\ 0 & -\frac{1}{2} & 0 \\ 0 & 0 & -\frac{1}{2} \end{bmatrix} \quad \text{and} \quad [\mathbf{F}^{-1}] = \begin{bmatrix} \frac{1}{4} & 0 & 0 \\ 0 & -2 & 0 \\ 0 & 0 & -2 \end{bmatrix} \tag{ii}$$

$$\det\mathbf{F} = 1 \tag{iii}$$

Thus, from Eq. (4.10.6a) , we have, the first Piola-Kirchhoff stress tensor:

$$[\mathbf{T}_o] = (1) \begin{bmatrix} 100 & 0 & 0 \\ 0 & 0 & 0 \\ 0 & 0 & 0 \end{bmatrix} \begin{bmatrix} \frac{1}{4} & 0 & 0 \\ 0 & -2 & 0 \\ 0 & 0 & -2 \end{bmatrix} = \begin{bmatrix} 25 & 0 & 0 \\ 0 & 0 & 0 \\ 0 & 0 & 0 \end{bmatrix} \text{MPa} \tag{v}$$

The second Piola-Kirchhoff stress tensor is, from Eq. (4.10.11)

$$[\tilde{\mathbf{T}}] = [\mathbf{F}]^{-1}[\mathbf{T}_o] = = \begin{bmatrix} \frac{25}{4} & 0 & 0 \\ 0 & 0 & 0 \\ 0 & 0 & 0 \end{bmatrix} \text{MPa} \tag{vi}$$

Example 4.10.2

The equilibrium configuration of a body is described by

$$x_1 = \frac{1}{2}X_1, \quad x_2 = -\frac{1}{2}X_3, \quad x_3 = 4X_2 \tag{i}$$

If the Cauchy stress tensor for this body is

$$\begin{bmatrix} 0 & 0 & 0 \\ 0 & 0 & 0 \\ 0 & 0 & 100 \end{bmatrix} \text{MPa}$$

(a) What is the corresponding first Piola-Kirchhoff stress tensor.

(b) What is the corresponding second Piola-Kirchhoff stress tensor and

(c) calculate the pseudo stress vector associated with the first Piola-Kirchhoff stress tensor on the $\mathbf{e}_3$ - plane in the deformed state.

(d) calculate the pseudo-stress vector associated with the second Piola-Kirchhoff stress tensor on the $\mathbf{e}_3$ - plane in the deformed state.

Solution. From Eqs. (i), we have

$$[\mathbf{F}] = \begin{bmatrix} \frac{1}{2} & 0 & 0 \\ 0 & 0 & -\frac{1}{2} \\ 0 & 4 & 0 \end{bmatrix} \quad \text{and} \quad [\mathbf{F}^{-1}] = \begin{bmatrix} 2 & 0 & 0 \\ 0 & 0 & \frac{1}{4} \\ 0 & -2 & 0 \end{bmatrix} \tag{ii}$$

$$\det\mathbf{F} = 1 \tag{iii}$$

Thus, from Eq. (4.10.6) , we have, the first Piola-Kirchhoff stress tensor:

$$[\mathbf{T}_o] = (1) \begin{bmatrix} 0 & 0 & 0 \\ 0 & 0 & 0 \\ 0 & 0 & 100 \end{bmatrix} \begin{bmatrix} 2 & 0 & 0 \\ 0 & 0 & -2 \\ 0 & \frac{1}{4} & 0 \end{bmatrix} = \begin{bmatrix} 0 & 0 & 0 \\ 0 & 0 & 0 \\ 0 & 25 & 0 \end{bmatrix} \text{MPa} \tag{iv}$$

The second Piola-Kirchhoff stress tensor is, from Eq. (4.10.11)

$$[\tilde{\mathbf{T}}] = [\mathbf{F}]^{-1}[\mathbf{T}_o] = = \begin{bmatrix} 0 & 0 & 0 \\ 0 & \frac{25}{4} & 0 \\ 0 & 0 & 0 \end{bmatrix} \text{ MPa} \tag{v}$$

(c) For a unit area in the deformed state in the $\mathbf{e}_3$ direction, its undeformed area $dA_o\,\mathbf{n}_o$ is given by Eq. (3.28.6). That is

$$dA_o\,\mathbf{n}_o = \frac{1}{\det\mathbf{F}}\mathbf{F}^T\mathbf{n} \tag{vi}$$

With $\det\mathbf{F} = 1$, and the matrix $\mathbf{F}$ given above, we obtain

$$dA_o\,\mathbf{n}_o = 4\mathbf{e}_2 \tag{vii}$$

Thus, $\mathbf{n}_o = \mathbf{e}_2$ and

$$\mathbf{t}_o = \mathbf{T}_o\mathbf{n}_o$$

gives

$$[\mathbf{t}_o] = \begin{bmatrix} 0 & 0 & 0 \\ 0 & 0 & 0 \\ 0 & 25 & 0 \end{bmatrix} \begin{bmatrix} 0 \\ 1 \\ 0 \end{bmatrix} = \begin{bmatrix} 0 \\ 0 \\ 25 \end{bmatrix}$$

i.e, $\mathbf{t}_o = 25\mathbf{e}_3$ MPa. We note that this vector is in the same direction as the Cauchy stress vector, its magnitude is one fourth of that of the Cauchy stress vector, because the undeformed area is 4 times that of the deformed area.

(d) We have, from Eq. (4.10.9)

$$\tilde{\mathbf{t}} = \tilde{\mathbf{T}}\mathbf{n}_o$$

Thus,

$$[\tilde{\mathbf{t}}] = \begin{bmatrix} 0 & 0 & 0 \\ 0 & \frac{25}{4} & 0 \\ 0 & 0 & 0 \end{bmatrix} \begin{bmatrix} 0 \\ 1 \\ 0 \end{bmatrix} = \begin{bmatrix} 0 \\ \frac{25}{4} \\ 0 \end{bmatrix}$$

i. e., $\tilde{\mathbf{t}} = \frac{25}{4}\mathbf{e}_2$ MPa.

We see that this pseudo stress vector is in a different direction from that of the Cauchy stress vector. (We note that the tensor $\mathbf{F}$ transforms $\mathbf{e}_2$ into the direction of $\mathbf{e}_3$.)

4.11 Equations of Motion Written With Respect to the Reference Configuration.

In this section, we shall show† that with respect to the reference configuration, the equations of motion can be written as follows:

$$\frac{\partial (T_o)_{im}}{\partial X_m} + \rho_o B_i = \rho_o a_i \tag{4.11.1}$$

where $(T_o)_{ij}$ are the Cartesian components of the first Piola-Kirchhoff stress tensor, ρ_o is the density in the reference configuration, X_i are the material coordinates and B_i and a_i are body force per unit mass and the acceleration components respectively.

From Eq. (4.10.7b), we have

$$T_{ij} = \frac{1}{\det \mathbf{F}} (T_o)_{im} F_{jm} \tag{i}$$

Thus,

$$\frac{\partial T_{ij}}{\partial x_j} = \frac{\partial (T_o)_{im}}{\partial x_j} \frac{F_{jm}}{\det \mathbf{F}} + (T_o)_{im} \frac{\partial}{\partial x_j}\left(\frac{F_{jm}}{\det \mathbf{F}}\right) = \frac{\partial (T_o)_{im}}{\partial x_j} \frac{1}{\det \mathbf{F}} \left(\frac{\partial x_j}{\partial X_m}\right) + (T_o)_{im} \frac{\partial}{\partial x_j}\left(\frac{F_{jm}}{\det \mathbf{F}}\right) \tag{ii}$$

Now,

$$\frac{\partial (T_o)_{im}}{\partial x_j} \frac{1}{\det \mathbf{F}} \frac{\partial x_j}{\partial X_m} = \frac{\partial (T_o)_{im}}{\partial X_n} \frac{\partial X_n}{\partial x_j} \frac{1}{\det \mathbf{F}} \frac{\partial x_j}{\partial X_m} = \frac{\partial (T_o)_{im}}{\partial X_n} \frac{\partial X_n}{\partial X_m} \frac{1}{\det \mathbf{F}}$$

$$= \frac{\partial (T_o)_{im}}{\partial X_n} \delta_{nm} \frac{1}{\det \mathbf{F}} = \frac{\partial (T_o)_{im}}{\partial X_m} \frac{1}{\det \mathbf{F}} \tag{iii}$$

and we can show that the last term of Eq. (ii) is zero as follows:

$$\frac{\partial}{\partial x_j}\left(\frac{F_{jm}}{\det \mathbf{F}}\right) = \frac{1}{(det \mathbf{F})} \frac{\partial}{\partial x_j} \frac{\partial \hat{x_j}}{\partial X_m} - F_{jm} \frac{1}{(det \mathbf{F})^2} \frac{\partial}{\partial x_j} \det \mathbf{F}$$

$$= \frac{1}{(det \mathbf{F})} \frac{\partial^2 \hat{x_j}}{\partial X_n \partial X_m} \frac{\partial X_n}{\partial x_j} - \frac{\partial x_j}{\partial X_m} \frac{1}{(det \mathbf{F})^2} \left(\frac{\partial}{\partial X_n} \det \mathbf{F}\right) \frac{\partial X_n}{\partial x_j}$$

† In Chapter 7, an alternate shorter proof will be given.

$$= \frac{1}{(det\mathbf{F})}\frac{\partial^2 \hat{x_j}}{\partial X_n \partial X_m}\frac{\partial X_n}{\partial x_j} - \frac{1}{(det\mathbf{F})^2}\left(\frac{\partial}{\partial X_n}\det\mathbf{F}\right)\delta_{mn} = \frac{1}{(detF)}\frac{\partial^2 \hat{x_j}}{\partial X_n \partial X_m}\frac{\partial X_n}{\partial x_j} - \frac{1}{(det\mathbf{F})^2}\left(\frac{\partial}{\partial X_m}\det\mathbf{F}\right)$$

(iv)

By using the following identity [see Prob. 4.40] for any tensor $\mathbf{A}(X_1,X_2,X_3)$

$$\frac{\partial}{\partial X_m}\det\mathbf{A} = \det\mathbf{A}\,(\mathbf{A}^{-1})_{nj}\frac{\partial A_{jn}}{\partial X_m} \tag{4.11.2}$$

we obtain,

$$\frac{\partial}{\partial X_m}\det\mathbf{F} = \det\mathbf{F}\frac{\partial X_n}{\partial x_j}\frac{\partial F_{jn}}{\partial X_m} = \det\mathbf{F}\frac{\partial X_n}{\partial x_j}\frac{\partial^2 \hat{x_j}}{\partial X_n \partial X_m} \tag{v}$$

so that

$$\left(\frac{\partial}{\partial x_j}\right)\left(\frac{F_{jm}}{\det\mathbf{F}}\right) = 0 \tag{vi}$$

Thus,

$$\frac{\partial T_{ij}}{\partial x_j} = \frac{\partial (T_o)_{im}}{\partial X_m}\frac{1}{\det\mathbf{F}} \tag{vii}$$

Substituting Eq. (vii) in the Cauchy's Equation of motion [Eq.(4.7.2b)], we get

$$\frac{\partial (T_o)_{im}}{\partial X_m} + \rho(\det\mathbf{F})B_i = \rho(det\mathbf{F})a_i \tag{viii}$$

Since $dV = (\det\mathbf{F})dV_o$ [See Eq. (3.29.3)], therefore,

$$\rho\det\mathbf{F} = \rho_o \tag{4.11.3}$$

where ρ_o is the initial density. Thus, we have, in terms of the first Piola-Kirchhoff stress tensor and with respect to the material coordinates, the equations of motion take the following form

$$\frac{\partial (T_o)_{im}}{\partial X_m} + \rho_o B_i = \rho_o a_i \tag{4.11.4}$$

whereas in terms of the Cauchy stress tensor and with respect to the spatial coordinates, the equations of motion take the form

$$\frac{\partial T_{im}}{\partial x_m} + \rho B_i = \rho a_i \tag{4.11.5}$$

In invariant notation, Eq. (4.11.4) reads

$$\mathrm{Div}\mathbf{T}_o + \rho_o \mathbf{B} = \rho_o \mathbf{a} \tag{4.11.6}$$

where Div denotes the divergence with respect to the material coordinates **X** and Eq. (4.11.5) reads

$$\mathrm{div}\mathbf{T} + \rho \mathbf{B} = \rho \mathbf{a} \tag{4.11.7}$$

where div denotes the divergence with respect to the spatial coordinates **x**.

4.12 Stress Power

Referring to the infinitesimal rectangular parallelepiped of Fig. 4.8 which is repeated here for convenience, let us compute the rate at which work is done by the stress vectors and body force on the particle as it moves and deforms.

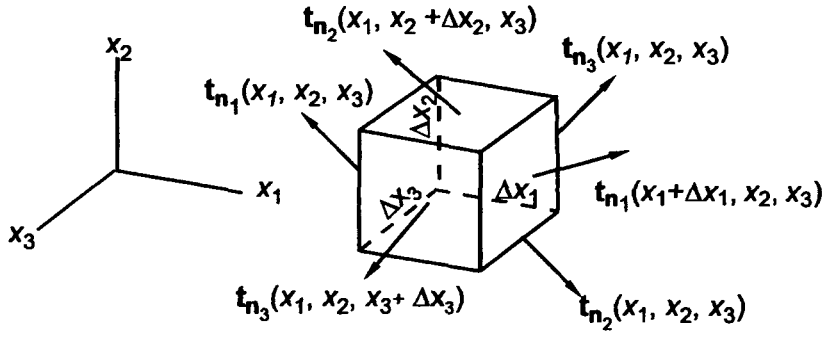

Fig. 4.8 (repeated)

The rate at which work is done by the stress vectors $\mathbf{t}_{-\mathbf{e}_1}$ and $\mathbf{t}_{\mathbf{e}_1}$ on the pair of faces having $-\mathbf{e}_1$ and $\mathbf{e}_1$ as their respective normal is:

$$[(\mathbf{t}_{\mathbf{e}_1} \cdot \mathbf{v})_{x_1+dx_1, x_2, x_3} - (\mathbf{t}_{\mathbf{e}_1} \cdot \mathbf{v})_{x_1, x_2, x_3}] dx_2 dx_3 = \frac{\partial}{\partial x_1}(\mathbf{t}_{\mathbf{e}_1} \cdot \mathbf{v}) dx_1 dx_2 dx_3 = \left[\frac{\partial}{\partial x_1}(v_i T_{i1})\right] dV \tag{i}$$

where we have used the fact that $\mathbf{t}_{\mathbf{e}_1} \cdot \mathbf{v} = \mathbf{T}\mathbf{e}_1 \cdot v_i \mathbf{e}_i = v_i \mathbf{e}_i \cdot \mathbf{T}\mathbf{e}_1 = v_i T_{i1}$, and $dV = dx_1 dx_2 dx_3$ denotes the differential volume. Similarly, the rate at which work is done by the stress vectors on the other two pairs of faces are: $\left[\frac{\partial}{\partial x_2}(v_i T_{i2})\right] dV$ and $\left[\frac{\partial}{\partial x_3}(v_i T_{i3})\right] dV$.

Including the rate of work done by the body force ($\rho \mathbf{B} dV \cdot \mathbf{v} = \rho B_i v_i dV$) the total rate of work done on the particle is

$$P = \frac{\partial}{\partial x_j}(v_i T_{ij})dV + \rho B_i v_i dV \tag{4.12.1}$$

Since

$$\frac{\partial}{\partial x_j}(v_i T_{ij}) = v_i \frac{\partial T_{ij}}{\partial x_j} + T_{ij}\frac{\partial v_i}{\partial x_j} \tag{ii}$$

Eq. (4.12.1) takes the form

$$P = v_i\left[\frac{\partial T_{ij}}{\partial x_j} + \rho B_i\right]dV + T_{ij}\frac{\partial v_i}{\partial x_j}dV \tag{4.12.2}$$

However, we have from the equations of motion

$$\frac{\partial T_{ij}}{\partial x_j} + \rho B_i = \rho\frac{Dv_i}{Dt} \tag{4.12.3}$$

therefore, we have

$$P = v_i\frac{Dv_i}{Dt}\rho dV + T_{ij}\frac{\partial v_i}{\partial x_j}dV \tag{4.12.4}$$

The first term in the right-hand side of Eq. (4.12.4) represents the rate of change of kinetic energy of the particle as is seen from the following:

$$\frac{D}{Dt}(KE) = \frac{D}{Dt}\left[\frac{1}{2}(\rho dV)v_i v_i\right] = (\rho dV)v_i\frac{Dv_i}{Dt} + \frac{1}{2}v_i v_i\frac{D}{Dt}[(\rho dV)] = (\rho dV)v_i\frac{Dv_i}{Dt} \tag{4.12.5}$$

where we note that $\frac{D}{Dt}(\rho dV) = 0$ on account of the mass conservation principle. Thus, from Eq. (4.12.4)

$$P = \frac{D}{Dt}(KE) + P_s dV \tag{4.12.6}$$

where

$$P_s = T_{ij}\frac{\partial v_i}{\partial x_j} = \mathrm{tr}(\mathbf{T}^T\nabla_{\mathbf{x}}\mathbf{v}) \tag{4.12.7}$$

is known as the **stress power**. It represents the rate at which work is done to change the volume and shape of a particle of unit volume.

For a symmetric stress tensor $T_{ij} = T_{ji}$ so that $T_{ij}\frac{\partial v_i}{\partial x_j} = T_{ji}\frac{\partial v_i}{\partial x_j} = T_{ij}\frac{\partial v_j}{\partial x_i}$. Thus,

$$P_s = \frac{1}{2}T_{ij}\left(\frac{\partial v_i}{\partial x_j} + \frac{\partial v_j}{\partial x_i}\right) = T_{ij}D_{ij} = T_{ji}D_{ij} \tag{4.12.8a}$$

where D_{ij} are the components of the rate of deformation tensor defined in Section 3.13.

Equation (4.12.8a) can be written in the invariant form

$$P_s = \mathrm{tr}(\mathbf{TD}) \tag{4.12.8b}$$

Example 4. 12.1

Show that the stress power can be expressed in terms of the first Piola-Kirchhoff stress tensor $\mathbf{T}_o$ and the deformation gradient $\mathbf{F}$ as the following

$$P_s = \frac{\rho}{\rho_o}\mathrm{tr}(\mathbf{T}_o^T\frac{D\mathbf{F}}{Dt}) = \frac{\rho}{\rho_o}\left[(T_o)_{ij}\frac{DF_{ij}}{Dt}\right] \tag{4.12.9}$$

Solution. In Sect. 3.12, we obtained [see Eq. (3.12.4)],

$$\frac{D}{Dt}d\mathbf{x} = (\nabla_{\mathbf{x}}\mathbf{v})\, d\mathbf{x}$$

Since $d\mathbf{x} = \mathbf{F}\, d\mathbf{X}$ [see Eq. (3.7.2)], therefore

$$\frac{D}{Dt}(\mathbf{F}\, d\mathbf{X}) = (\nabla_{\mathbf{x}}\mathbf{v})\, \mathbf{F}\, d\mathbf{X} \tag{i}$$

Equation (i) is to be true for all $d\mathbf{X}$, thus

$$\frac{D\mathbf{F}}{Dt} = (\nabla_{\mathbf{x}}\mathbf{v})\mathbf{F} \tag{4.12.10a}$$

or,

$$(\nabla_{\mathbf{x}}\mathbf{v}) = \frac{D\mathbf{F}}{Dt}\mathbf{F}^{-1} \tag{4.12.10b}$$

Using Eqs. (4.12.7) and (4.12.10b), the stress power can be written

$$P_s = \mathrm{tr}(\mathbf{T}^T\nabla_{\mathbf{x}}\mathbf{v}) = \mathrm{tr}(\mathbf{T}^T\frac{D\mathbf{F}}{Dt}\,\mathbf{F}^{-1}) \tag{ii}$$

Since [see Eq. (4.10.7)]

$$\mathbf{T} = \frac{1}{\det\mathbf{F}}\,\mathbf{T}_o\,\mathbf{F}^T$$

therefore,

$$P_s = \frac{1}{\det\mathbf{F}}\,\mathrm{tr}(\mathbf{F}\mathbf{T}_o^T\frac{D\mathbf{F}}{Dt}\,\mathbf{F}^{-1}) \tag{iii}$$

Using the identity tr(**ABCD**) = tr(**BCDA**) = tr(**CDAB**) and the relation $\det\mathbf{F} = \frac{\rho_o}{\rho}$, Eq. (iii) becomes

$$P_s = \frac{\rho}{\rho_o}\mathrm{tr}(\mathbf{T}_o^T\frac{D\mathbf{F}}{Dt}).$$

Example 4.12.2

Show that the stress power can be expressed in terms of the second Piola-Kirchhoff stress tensor $\tilde{\mathbf{T}}$ and the Lagrange strain tensor $\mathbf{E}^*$ as follows

$$P_s = \frac{\rho}{\rho_o}\mathrm{tr}(\tilde{\mathbf{T}}\frac{D\mathbf{E}^*}{Dt}) = \frac{\rho}{\rho_o}\tilde{T}_{ij}\frac{DE_{ij}^*}{Dt} \tag{4.12.11}$$

Solution. From Eq. (3.13.6),

$$\frac{D}{Dt}ds^2 = 2d\mathbf{x}\cdot\mathbf{D}\,d\mathbf{x}$$

and Eq. (3.7.2)

$$d\mathbf{x} = \mathbf{F}\,d\mathbf{X}$$

we obtain

$$\frac{D}{Dt}ds^2 = 2\mathbf{F}\,d\mathbf{X}\cdot\mathbf{D}\,\mathbf{F}\,d\mathbf{X} = 2d\mathbf{X}\cdot\mathbf{F}^T(\mathbf{DF})\,d\mathbf{X} \tag{i}$$

From Eq. (3.24.2), we obtain

$$ds^2 = dS^2 + 2d\mathbf{X}\cdot\mathbf{E}^*\,d\mathbf{X}$$

so that

$$\frac{D}{Dt}ds^2 = 2d\mathbf{X}\cdot\frac{D\mathbf{E}^*}{Dt}\,d\mathbf{X} \tag{4.12.12}$$

Compare Eq. (i) with Eq. (4.12.12), we obtain

$$\frac{D\mathbf{E}^*}{Dt} = \mathbf{F}^T\mathbf{D}\,\mathbf{F} \tag{4.12.13}$$

Using Eq. (4.10.11), that is

$$\mathbf{T} = \frac{1}{\det\mathbf{F}}\mathbf{F}\,\tilde{\mathbf{T}}\mathbf{F}^T$$

we have for the stress power

$$P_s = \mathrm{tr}(\mathbf{TD}) = \frac{1}{\det\mathbf{F}}\mathrm{tr}(\mathbf{F}\,\tilde{\mathbf{T}}\mathbf{F}^T\mathbf{D}) = \frac{1}{\det\mathbf{F}}\mathrm{tr}(\tilde{\mathbf{T}}\mathbf{F}^T\mathbf{DF}) \tag{ii}$$

Making use of Eq. (4.12.13), Eq. (ii) becomes

$$P_s = \frac{1}{\det\mathbf{F}}\mathrm{tr}(\tilde{\mathbf{T}}\frac{D\mathbf{E}}{Dt})^* = \frac{\rho}{\rho_o}\mathrm{tr}(\tilde{\mathbf{T}}\frac{D\mathbf{E}}{Dt})^*$$

We note that $(\mathbf{T},\mathbf{D})$, $(\mathbf{T}_o, \frac{D\mathbf{F}}{Dt})$ and $(\tilde{\mathbf{T}}, \frac{D\mathbf{E}}{Dt}^*)$ are sometimes known as conjugate pairs.

4.13 Rate of Heat Flow Into an Element by Conduction

Let $\mathbf{q}$ be a vector whose magnitude gives the rate of heat flow across a unit area by conduction and whose direction gives the direction of heat flow, then the net heat flow by conduction Q_c into a differential element can be computed as follows:

Referring to the infinitesimal rectangular parallelepiped of Fig. 4.10, the rate at which heat flows into the element across the face with $\mathbf{e}_1$ as its outward normal is $[(-\mathbf{q}\cdot\mathbf{e}_1)_{x_1+d\,x_1,x_2,x_3}\,dx_2dx_3$ and that across the face with $-\mathbf{e}_1$ as its outward normal is $[(\mathbf{q}\cdot\mathbf{e}_1)_{x_1,x_2,x_3}dx_2dx_3$. Thus, the net rate of heat inflow across the pair of faces is given by

$$-[q_1(x_1+dx_1,x_2,x_3)-q_1(x_1,x_2,x_3)]dx_2dx_3 = -(\frac{\partial q_1}{\partial x_1})dx_1dx_2dx_3. \tag{i}$$

where $q_i \equiv \mathbf{q}\cdot\mathbf{e}_i$. Similarly, the net rate of heat inflow across the other two pairs of faces is

$$-(\frac{\partial q_2}{\partial x_2})dx_1dx_2dx_3 \quad\text{and}\quad -(\frac{\partial q_3}{\partial x_3})dx_1dx_2dx_3$$

so that the total net rate of heat inflow by conduction is

$$Q_c = -\left(\frac{\partial q_1}{\partial x_1}+\frac{\partial q_2}{\partial x_2}+\frac{\partial q_3}{\partial x_3}\right)dV = -\,(\mathrm{div}\mathbf{q})dV \tag{4.13.1}$$

Example 4.13.1

Using the Fourier heat conduction law $\mathbf{q} = -\kappa\nabla\Theta$, where $\nabla\Theta$ is the temperature gradient and κ is the coefficient of thermal conductivity, find the equation governing the steady-state distribution of temperature.

Solution. From Eq. (4.13.1), we have, per unit volume, the net rate of heat inflow is given by

$$-\left[\frac{\partial}{\partial x_1}(\kappa\frac{\partial\Theta}{\partial x_1})+\frac{\partial}{\partial x_2}(\kappa\frac{\partial\Theta}{\partial x_2})+\frac{\partial}{\partial x_3}(\kappa\frac{\partial\Theta}{\partial x_3})\right]. \tag{i}$$

Now, if the boundaries of the body are kept at fixed temperature, then when the steady-state is reached, the net rate of heat flow into any element in the body must be zero. Thus, the desired equation is

$$\frac{\partial}{\partial x_1}(\kappa\frac{\partial\Theta}{\partial x_1}) + \frac{\partial}{\partial x_2}(\kappa\frac{\partial\Theta}{\partial x_2}) + \frac{\partial}{\partial x_3}(\kappa\frac{\partial\Theta}{\partial x_3}) = 0 \tag{4.13.2}$$

For constant κ, this reduces to the Laplace equation

$$\frac{\partial^2\Theta}{\partial x_1^2} + \frac{\partial^2\Theta}{\partial x_2^2} + \frac{\partial^2\Theta}{\partial x_3^2} = 0 \tag{4.13.3}$$

4.14 Energy Equation

Consider a particle with a differential volume dV at the position **x** at time t. Let U denote its internal energy, KE the kinetic energy, Q_c the net rate of heat flow by conduction into the particle from its surroundings, Q_s the rate of heat input due to external sources (such as radiation) and P the rate at which work is done on the particle by body forces and surface forces (i.e., P is the mechanical power input). Then, in the absence of other forms of energy input, the fundamental postulate of conservation of energy states that

$$\frac{D}{Dt}(U+KE) = P + Q_c + Q_s \tag{4.14.1}$$

Now, using Eq. (4.12.6) and Eq. (4.13.1), we have

$$P = \frac{D}{Dt}(KE) + T_{ij}\frac{\partial v_i}{\partial x_j}dV \tag{i}$$

$$Q_c = -\frac{\partial q_i}{\partial x_i}dV \tag{ii}$$

thus, Eq. (4.14.1) becomes

$$\frac{DU}{Dt} = T_{ij}\frac{\partial v_i}{\partial x_j}dV - \frac{\partial q_i}{\partial x_i}dV + Q_s \tag{iii}$$

If we let u be the internal energy per unit mass, then

$$\frac{DU}{Dt} = \frac{D(u\,\rho dV)}{Dt} = \rho\, dV\frac{Du}{Dt} \tag{iv}$$

In arriving at the above equation, we have used the conservation of mass principle

$$(D/Dt)(\rho\, dV) = 0 \tag{v}$$

Thus, the energy equation (4.14.1) becomes

$$\rho\frac{Du}{Dt} = T_{ij}\frac{\partial v_i}{\partial x_j} - \frac{\partial q_i}{\partial x_i} + \rho q_s \tag{4.14.2a}$$

where q_s is the rate of heat input (known simply as the heat supply) per unit mass by external sources. In invariant notation, Eq. (4.14.2a) is written

$$\rho\frac{Du}{Dt} = \mathrm{tr}(\mathbf{TD}) - \mathrm{div}\mathbf{q} + \rho q_s \tag{4.14.2b}$$

4.15 Entropy Inequality

Let $\eta(\mathbf{x}, t)$ denote the entropy per unit mass for the continuum. Then the entropy in a volume dV of the material is $\rho\eta dV$, where ρ is density. The rate of increase of entropy following the volume of material as it is moving is

$$\frac{D}{Dt}(\rho\eta dV) \tag{i}$$

which is equal to $\rho dV\frac{D\eta}{Dt}$, because $\frac{D}{Dt}(\rho dV) = 0$ in accordance with the conservation of mass principle. Thus, per unit volume, the rate of increase of entropy is given by $\rho\frac{D\eta}{Dt}$

The entropy inequality law states that

$$\rho\frac{D\eta}{Dt} \geq \mathrm{div}\frac{\mathbf{q}}{\Theta} + \rho\frac{q_s}{\Theta} \tag{4.15.1}$$

where Θ is the absolute temperature, $\mathbf{q}$ is the heat flux vector and q_s is the heat supply.

Problems

4.1. The state of stress at certain point of a body is given by

$$[\mathbf{T}] = \begin{bmatrix} 1 & 2 & 3 \\ 2 & 4 & 5 \\ 3 & 5 & 0 \end{bmatrix}_{\mathbf{e}_i} \text{ MPa}$$

On each of the coordinate planes (normals $\mathbf{e}_1$, $\mathbf{e}_2$, $\mathbf{e}_3$) (a) what is the normal stress and (b) what is the total shearing stress.

4.2. The state of stress at a certain point of a body is given by

$$[\mathbf{T}] = \begin{bmatrix} 2 & -1 & 3 \\ -1 & 4 & 0 \\ 3 & 0 & -1 \end{bmatrix} \text{ MPa}$$

(a) Find the stress vector at a point on the plane whose normal is in the direction $2\mathbf{e}_1 + 2\mathbf{e}_2 + \mathbf{e}_3$.

(b) Determine the magnitude of the normal and shearing stresses on this plane.

4.3. Do the previous problem for a plane passing through the point and parallel to the plane $x_1 - 2x_2 + 3x_3 = 4$.

4.4. The stress distribution in a certain body is given by

$$[\mathbf{T}] = \begin{bmatrix} 0 & 100x_1 & -100x_2 \\ 100x_1 & 0 & 0 \\ -100x_2 & 0 & 0 \end{bmatrix}.$$

Find the stress vector acting on a plane which passes through the point $(1/2, \sqrt{3}/2, 3)$ and is tangent to the circular cylindrical surface $x_1^2 + x_2^2 = 1$ at that point.

4.5. Given $T_{11} = 1$ Mpa, $T_{22} = -1$Mpa and all other $T_{ij} = 0$ at a point in a continuum.

(a) Show that the only plane on which the stress vector is zero is the plane with normal in the $\mathbf{e}_3$–direction.

(b) Give three planes on which there is no normal stress acting.

4.6. For the following state of stress

$$[\mathbf{T}] = \begin{bmatrix} 10 & 50 & -50 \\ 50 & 0 & 0 \\ -50 & 0 & 0 \end{bmatrix} \text{ MPa}$$

find T_{11}' and T_{13}' where $\mathbf{e}_1'$ is in the direction of $\mathbf{e}_1 + 2\mathbf{e}_2 + 3\mathbf{e}_3$ and $\mathbf{e}_2'$ is in the direction of $\mathbf{e}_1 + \mathbf{e}_2 - \mathbf{e}_3$.

4.7. Consider the following stress distribution

$$[\mathbf{T}] = \begin{bmatrix} \alpha x_2 & \beta & 0 \\ \beta & 0 & 0 \\ 0 & 0 & 0 \end{bmatrix}$$

where α and β are constants.

(a) Determine and sketch the distribution of the stress vector acting on the square in the $x_1 = 0$ plane with vertices located at (0,1,1), (0,-1, 1), (0,1,-1), (0,-1,-1).

(b) Find the total resultant force and moment about the origin of the stress vectors acting on the square of part (a).

4.8. Do the previous problem if the stress distribution is given by

$$T_{11} = \alpha x_2^2$$

and all other $T_{ij} = 0$.

4.9. Do problem 4.7 for the stress distribution

$$T_{11} = \alpha, \; T_{21} = T_{12} = \alpha x_3$$

and all other $T_{ij} = 0$.

4. 10. Consider the following stress distribution for a circular cylindrical bar

$$[\mathbf{T}] = \begin{bmatrix} 0 & -\alpha x_3 & +\alpha x_2 \\ -\alpha x_3 & 0 & 0 \\ \alpha x_2 & 0 & 0 \end{bmatrix}$$

(a) What is the distribution of the stress vector on the surfaces defined by $x_2^2 + x_3^2 = 4$, $x_1 = 0$ and $x_1 = l$?

(b) Find the total resultant force and moment on the end face $x_1 = l$.

4.11. An elliptical bar with lateral surface defined by $x_2^2 + 2x_3^2 = 1$ has the following stress distribution

$$[\mathbf{T}] = \begin{bmatrix} 0 & -2x_3 & x_2 \\ -2x_3 & 0 & 0 \\ x_2 & 0 & 1 \end{bmatrix} \text{MPa}$$

(a) Show that the stress vector any point(x_1, x_2, x_3) on the lateral surface is zero.

(b) Find the resultant force and resultant moment about the origin O of the stress vector on the left end face $x_1 = 0$.

$$\text{Note: } \int x_2^2 dA = \frac{\pi}{4\sqrt{2}} \text{ and } \int x_3^2 dA = \frac{\pi}{8\sqrt{2}}.$$

4.12. For any stress state **T**., we define the deviatoric stress **S** to be

$$\mathbf{S} = \mathbf{T} - \left(\frac{T_{kk}}{3}\right)\mathbf{I}$$

where T_{kk} is the first invariant of the stress tensor **T**.

(a) Show that the first invariant of the deviatoric stress vanishes.

(b) Given the stress tensor

$$[\mathbf{T}] = 100\begin{bmatrix} 6 & 5 & -2 \\ 5 & 3 & 4 \\ -2 & 4 & 9 \end{bmatrix} \text{ kPa}$$

evaluate **S**

(c) Show that the principal direction of the stress and the deviatoric stress coincide.

(d) Find a relation between the principal values of the stress and the deviatoric stress.

4.13. An octahedral stress plane is defined to make equal angles with each of the principal axes of stress.

(a) How many independent octahedral planes are there at each point?

(b) Show that the normal stress on an octahedral plane is given by one-third the first stress invariant.

(c) Show that the shearing stress on the octahedral plane is given by

$$T_s = \frac{1}{3}[(T_1 - T_2)^2 + (T_2 - T_3)^2 + (T_1 - T_3)^2]^{1/2},$$

where T_1, T_2, T_3 are the principal values of the stress tensor.

4.14. (a) Let **m** and **n** be two unit vectors that define two planes M and N that pass through a point P. For an arbitrary state of stress defined at the point P, show that the component of the stress vector $\mathbf{t_m}$ in the **n**- direction is equal to the component of the stress vector $\mathbf{t_n}$ in the **m**-direction.

(b) If $\mathbf{m} = \mathbf{e}_1$ and $\mathbf{n} = \mathbf{e}_2$, what does the result of part (a) reduce to?

4.15. Let **m** be a unit vector that defines a plane M passing through a point P. Show that the stress vector on any plane that contains the stress traction $\mathbf{t}_m$ lies in the M-plane.

4.16. Let $\mathbf{t_m}$ and $\mathbf{t_n}$ be stress vectors on planes defined by the unit vectors **m** and **n** and pass through the point P. Show that if **k** is a unit vector that determines a plane that contains $\mathbf{t_m}$ and $\mathbf{t_n}$, then $\mathbf{t_m}$ is perpendicular to **m** and **n**.

4. 17. True or false

(i) Symmetry of stress tensor is not valid if the body has an angular acceleration.

(ii) On the plane of maximum normal stress, the shearing stress is always zero.

4.18. True or false

(i) On the plane of maximum shearing stress, the normal stress is zero.

(ii) A plane with its normal in the direction of $\mathbf{e}_1 + 2\mathbf{e}_2 - 2\mathbf{e}_3$ has a stress vector $\mathbf{t} = 50\mathbf{e}_1 + 100\mathbf{e}_2 - 100\mathbf{e}_3$ MPa. It is a principal plane.

4.19. Why can the following two matrices not represent the same stress tensor?

$$\begin{bmatrix} 100 & 200 & 40 \\ 200 & 0 & -30 \\ 40 & -30 & -50 \end{bmatrix} \text{MPa} \quad \begin{bmatrix} 40 & 100 & 60 \\ 100 & 100 & 0 \\ 60 & 0 & 20 \end{bmatrix} \text{MPa.}$$

4.20. Given a

$$[\mathbf{T}] = \begin{bmatrix} 0 & 100 & 0 \\ 100 & 0 & 0 \\ 0 & 0 & 0 \end{bmatrix} \text{Mpa}$$

(a) Find the magnitude of shearing stress on the plane whose normal is in the direction of $\mathbf{e}_1 + \mathbf{e}_2$.

(b) Find the maximum and minimum normal stresses and the planes on which they act.

(c) Find the maximum shearing stress and the plane on which it acts.

4.21. The stress components at a point are given by

$$T_{11} = 100\text{MPa},\ T_{22} = 300\text{ MPa},\ T_{33} = 400\text{ MPa},\ T_{12} = T_{13} = T_{23} = 0$$

(a) Find the maximum shearing stress and the planes on which it acts.

(b) Find the normal stress on these planes.

(c) Are there any plane/planes on which the normal stress is 500 MPa?

4.22. The principal values of a stress tensor $\mathbf{T}$ are: $T_1 = 10$ MPa , $T_2 = -10$ MPa and $T_3 = 30$ MPa. If the matrix of the stress is given by

$$[\mathbf{T}] = \begin{bmatrix} T_{11} & 0 & 0 \\ 0 & 1 & 2 \\ 0 & 2 & T_{33} \end{bmatrix} \times 10\text{Mpa}$$

find the value of T_{11} and T_{33}.

4.23. If the state of stress at a point is

$$[\mathbf{T}] = \begin{bmatrix} 300 & 0 & 0 \\ 0 & -200 & 0 \\ 0 & 0 & 400 \end{bmatrix} \text{kPa}$$

find (a) the magnitude of the shearing stress on the plane whose normal is in the direction of $2\mathbf{e}_1 + 2\mathbf{e}_2 + \mathbf{e}_3$, and (b)the maximum shearing stress.

4.24. Given

$$[\mathbf{T}] = \begin{bmatrix} 1 & 4 & 0 \\ 4 & 1 & 0 \\ 0 & 0 & 1 \end{bmatrix} \text{MPa}.$$

(a) Find the stress vector on the plane whose normal is in the direction $\mathbf{e}_1 + \mathbf{e}_2$.

(b) Find the normal stress on the same plane.

(c) Find the magnitude of the shearing stress on the same plane.

(d) Find the maximum shearing stress and the planes on which this maximum shearing stress acts.

4.25. The stress state in which the only non-vanishing stress components are a single pair of shearing stresses is called simple shear. Take $T_{12} = T_{21} = \tau$ and all other $T_{ij} = 0$.

(a) Find the principal values and principal directions of this stress state.

(b) Find the maximum shearing stress and the plane on which it acts.

4.26. The stress state in which only the three normal stress components do not vanish is called tri-axial stress state. Take $T_{11} = \sigma_1$, $T_{22} = \sigma_2$, $T_{33} = \sigma_3$ with $\sigma_1 > \sigma_2 > \sigma_3$ and all other $T_{ij} = 0$. Find the maximum shearing stress and the plane on which it acts.

4.27. Show that the symmetry of the stress tensor is not valid if there are body moments per unit volume, as in the case of a polarized anisotropic dielectric solid.

4.28. Given the following stress distribution

$$[\mathbf{T}] = \begin{bmatrix} x_1 + x_2 & T_{12}(x_1,x_2) & 0 \\ T_{12}(x_1,x_2) & x_1 - 2x_2 & 0 \\ 0 & 0 & x_2 \end{bmatrix}$$

find T_{12} so that the stress distribution is in equilibrium with zero body force and so that the stress vector on $x_1 = 1$ is given by $\mathbf{t} = (1 + x_2)\mathbf{e}_1 + (5 - x_2)\mathbf{e}_2$.

4.29. Suppose the body force vector is $\mathbf{B} = -g\mathbf{e}_3$, where g is a constant. Consider the following stress tensor

$$[\mathbf{T}] = \alpha \begin{bmatrix} x_2 & -x_3 & 0 \\ -x_3 & 0 & -x_2 \\ 0 & -x_2 & T_{33} \end{bmatrix}$$

and find an expression for T_{33} such that $\mathbf{T}$ satisfies the equations of equilibrium.

4.30. In the absence of body forces, the equilibrium stress distribution for a certain body is

$$[\mathbf{T}] = \begin{bmatrix} Ax_2 & x_1 & 0 \\ x_1 & Bx_1 + Cx_2 & 0 \\ 0 & 0 & \frac{1}{2}(T_{11} + T_{22}) \end{bmatrix}$$

(a) Find the value of C.

(b) The boundary plane $x_1 - x_2 = 0$ for the body is free of stress. Determine the values of A and B.

4.31. In the absence of body forces, do the stress components

$$T_{11} = \alpha\,[x_2^2 + \nu\,(x_1^2 - x_2^2)],\quad T_{22} = \alpha\,[x_1^2 + \nu\,(x_2^2 - x_1^2)].$$

$$T_{33} = \alpha\,\nu\,(x_1^2 + x_2^2),\quad T_{12} = -2\alpha\,\nu x_1 x_2,\quad T_{13} = T_{23} = 0.$$

satisfy the equations of equilibrium?

4.32. Repeat the previous problem for the stress distribution

$$[\mathbf{T}] = \alpha \begin{bmatrix} x_1 + x_2 & 2x_1 - x_2 & 0 \\ 2x_1 - x_2 & x_1 - 3x_2 & 0 \\ 0 & 0 & x_1 \end{bmatrix}$$

4.33. Suppose that the stress distribution has the form (called plane stress)

$$[\mathbf{T}] = \alpha \begin{bmatrix} T_{11}(x_1,x_2) & T_{12}(x_1,x_2) & 0 \\ T_{12}(x_1,x_2) & T_{22}(x_1,x_2) & 0 \\ 0 & 0 & 0 \end{bmatrix}$$

(a) What are the equilibrium equations in this special case?

(b) If we introduce a function $\varphi(x_1,x_2)$ such that

$$T_{11} = \frac{\partial^2\varphi}{\partial x_2^2},\quad T_{22} = \frac{\partial^2\varphi}{\partial x_1^2},\quad T_{12} = -\frac{\partial^2\varphi}{\partial x_1 \partial x_2}$$

will this stress distribution be in equilibrium with zero body force?

4.34. In cylindrical coordinates (r,θ,z), consider a differential volume of material bounded by the three pairs of faces $r = r_o$, $r = r_o + dr$, $\theta = \theta_o$, $\theta = \theta_o + d\theta$ and $z = z_o$, $z = z_o + dz$. Derive the equations of motion in cylindrical coordinates and compare the equations with those given in Section 4.8.

4.35. Verify that the stress field of Example 4.8.1 satisfies the z-equation of equilibrium in the absence of body forces.

4.36. Given the following stress field in cylindrical coordinates

$$T_{rr} = -\frac{3Pr^2z}{2\pi R^5},\quad T_{\theta\theta} = 0,\quad T_{zz} = -\frac{3Pz^3}{2\pi R^5}$$

$$T_{rz} = -\frac{3Prz^2}{2\pi R^5},\quad T_{r\theta} = T_{z\theta} = 0,\quad R^2 = r^2 + z^2$$

Verify that the state of stress satisfies the equations of equilibrium in the absence of body force.

4.37. For the stress field given in Example 4.9.1, determine the constants A and B if the inner cylindrical wall is subjected to a uniform pressure p_o and the outer cylindrical wall is subjected to a uniform pressure p_o.

4.38. Verify that Eq. (4.8.2b) and (4.8.2c) are satisfied by the stress field given in Example 4.9.2.

4.39. In Example 4.9.2, if the spherical shell is subjected to an inner pressure of p_i and an outer pressure of p_o, determine the constant A and B

4.40. Prove that for any tensor $\mathbf{A}(X_1, X_2, X_3)$

$$\frac{\partial}{\partial X_m}\det\mathbf{A} = \det\mathbf{A}(A^{-1})_{nj}\frac{\partial A_{jn}}{\partial X_m}$$

4.41. The equilibrium configuration of a body is described by

$$x_1 = 16X_1,\ \ x_2 = -\frac{1}{4}X_2,\ \ x_3 = -\frac{1}{4}X_3$$

If the Cauchy stress tensor is given by $T_{11} = 1000$ MPa., all other $T_{ij} = 0$.

(a) Calculate the first Piola-Kirchoff stress tensor.

(b) Calculate the second Piola-Kirchoff stress tensor.

4.42. The equilibrium configuration of a body is described by

$$x_1 = -\frac{1}{2}X_1,\ \ x_2 = \frac{1}{2}X_3,\ \ x_3 = -4X_2 \tag{i}$$

If the Cauchy stress tensor for this body is

$$\begin{bmatrix} 0 & 0 & 0 \\ 0 & 0 & 0 \\ 0 & 0 & -100 \end{bmatrix} \text{MPa}$$

(a) What is the corresponding first Piola-Kirchhoff stress tensor?

(b) What is the corresponding second Piola-Kirchhoff stress tensor?

(c) Calculate the pseudo stress vector associated with the first Piola-Kirchhoff stress tensor on the $\mathbf{e}_3$ - plane in the deformed state.

(d) Calculate the pseudo stress vector associated with the second Piola-Kirchhoff stress tensor on the $\mathbf{e}_3$ - plane in the deformed state.