6

Newtonian Viscous Fluid

Substances such as water and air are examples of a fluid. Mechanically speaking they are different from a piece of steel or concrete in that they are unable to sustain shearing stresses without continuously deforming. For example, if water or air is placed between two parallel plates with say one of the plates fixed and the other plate applying a shearing stress, it will deform indefinitely with time if the shearing stress is not removed. Also, in the presence of gravity, the fact that water at rest always conforms to the shape of its container is a demonstration of its inability to sustain shearing stress at rest. Based on this notion of fluidity, we define a fluid to be a class of idealized materials which, when in rigid body motion(including the state of rest), cannot sustain any shearing stress. Water is also an example of a fluid that is referred to as a liquid which undergoes negligible density changes under a wide range of loads, whereas air is a fluid that is referred to as a gas which does otherwise. This aspect of behavior is generalized into the concept of incompressible and compressible fluids. However, under certain conditions (low Mach number flow) air can be treated as incompressible and under other conditions (e.g. the propagation of the acoustic waves) water has to be treated as compressible.

In this chapter, we study a special model of fluid, which has the property that the stress associated with the motion depends linearly on the instantaneous value of the rate of deformation. This model of fluid is known as a **Newtonian fluid** or **linearly viscous fluid** which has been found to describe adequately the mechanical behavior of many real fluids under a wide range of situations. However, some fluids, such as polymeric solutions, require a more general model (**Non-Newtonian Fluids**) for an adequate description. Non-Newtonian fluid models will be discussed in Chapter 8.

6.1 Fluids

Based on the notion of fluidity discussed in the previous paragraphs, we define a **fluid** to be a class of idealized materials which when in rigid body motions (including the state of rest) cannot sustain any shearing stresses. In other words, when a fluid is in a rigid body motion, the stress vector on *any* plane at any point is normal to the plane. That is for any $\mathbf{n}$,

$$\mathbf{Tn} = \lambda \mathbf{n} \tag{i}$$

It is easy to show from Eq. (i), that the magnitude of the stress vector λ is the same for every plane passing through a given point. In fact, let $\mathbf{n}_1$ and $\mathbf{n}_2$ be normals to any two such planes, then we have

$$\mathbf{T}\mathbf{n}_1 = \lambda_1 \mathbf{n}_1 \tag{ii}$$

and

$$\mathbf{T}\mathbf{n}_2 = \lambda_2 \mathbf{n}_2 \tag{iii}$$

Thus,

$$\mathbf{n}_1 \cdot \mathbf{T}\mathbf{n}_2 - \mathbf{n}_2 \cdot \mathbf{T}\mathbf{n}_1 = (\lambda_2 - \lambda_1)\mathbf{n}_1 \cdot \mathbf{n}_2 \tag{iv}$$

Since $\mathbf{n}_2 \cdot \mathbf{T}\mathbf{n}_1 = \mathbf{n}_1 \cdot \mathbf{T}^T \mathbf{n}_2$ and $\mathbf{T}$ is symmetric, therefore, the left side of Eq. (iv) is zero.

Thus,

$$(\lambda_1 - \lambda_2)\mathbf{n}_1 \cdot \mathbf{n}_2 = 0$$

Since $\mathbf{n}_1$ and $\mathbf{n}_2$ are any two vectors, therefore,

$$\lambda_1 = \lambda_2$$

In other words, on all planes passing through a point, not only are there no shearing stresses but also the normal stresses are all the same. We shall denote this normal stress by $-p$. Thus, for a fluid in rigid body motion or at rest

$$\mathbf{T} = -p\mathbf{I} \tag{6.1.1a}$$

Or, in component form

$$T_{ij} = -p\delta_{ij} \tag{6.1.1b}$$

The scalar p is the magnitude of the compressive normal stress and is known as the **hydrostatic pressure.**

6.2 Compressible and Incompressible Fluids

What one generally calls a "liquid" such as water or mercury has the property that its density essentially remains unchanged under a wide range of pressures. Idealizing this property, we define an **incompressible fluid** to be one for which the density of every particle remains the same at all times regardless of the state of stress. That is for an incompressible fluid

$$\frac{D\rho}{Dt} = 0 \tag{6.2.1}$$

It then follows from the equation of conservation of mass, Eq. (3.15.2b)

$$\frac{D\rho}{Dt} + \rho \frac{\partial v_k}{\partial x_k} = 0 \tag{6.2.2}$$

that

$$\frac{\partial v_k}{\partial x_k} = 0 \tag{6.2.3a}$$

or,

$$\operatorname{div} \mathbf{v} = 0 \tag{6.2.3b}$$

All incompressible fluids need not have a spatially uniform density (e.g. salt water with nonuniform salt concentration with depth may be modeled as a nonhomogeneous fluid). If the density is also uniform, it is referred to as a " homogeneous fluid," for which ρ is constant everywhere.

Substances such as air and vapors which change their density appreciably with pressure are often treated as compressible fluids. Of course, it is not hard to see that there are situations where water has to be regarded as compressible and air may be regarded as incompressible. However, for theoretical studies, it is convenient to regard the incompressible and compressible fluid as two distinct kinds of fluids.

6.3 Equations Of Hydrostatics

The equations of equilibrium are [see Eqs. (4.7.3)]

$$\frac{\partial T_{ij}}{\partial x_j} + \rho B_i = 0 \tag{6.3.1}$$

where B_i are components of body forces per unit mass.

With

$$T_{ij} = -p\delta_{ij},$$

Eq. (6.3.1) becomes

$$\frac{\partial p}{\partial x_i} = \rho B_i \tag{6.3.2a}$$

or,

$$\nabla p = \rho \mathbf{B} \tag{6.3.2b}$$

In the case where B_i are components of the weight per unit mass, if we let the positive x_3 axis be pointing vertically downward, we have,

$$B_1 = 0, \quad B_2 = 0, \quad B_3 = g \tag{6.3.3}$$

so that

$$\frac{\partial p}{\partial x_1} = 0 \tag{6.3.4a}$$

$$\frac{\partial p}{\partial x_2} = 0 \tag{6.3.4b}$$

$$\frac{\partial p}{\partial x_3} = \rho g \tag{6.3.4c}$$

Equations (6.3.4a, b) state that p is a function of x_3 alone and Eq. (6.3.4c) gives the pressure difference between point 2 and point 1 in the liquid as

$$p_2 - p_1 = \rho g h \tag{6.3.5}$$

where h is the depth of point 2 relative to point 1. Thus, the static pressure in the liquid depends only on the depth. It is the same for all particles that are on the same horizontal plane within the same fluid.

If the fluid is in a state of rigid body motion (rate of deformation = 0), then T_{ij} is still given by Eq. (6.1.1), but the right hand side of Eq. (6.3.1) is equal to the acceleration a_i, so that the governing equation is given by

$$-\frac{\partial p}{\partial x_i} + \rho B_i = \rho\, a_i \tag{6.3.6}$$

Example 6.3.1

A cylindrical body of radius r, length l and weight W is tied by a rope to the bottom of a container which is filled with a liquid of density ρ (Fig. 6.1). If the density of the body ρ is less than that of the liquid, find the tension in the rope.

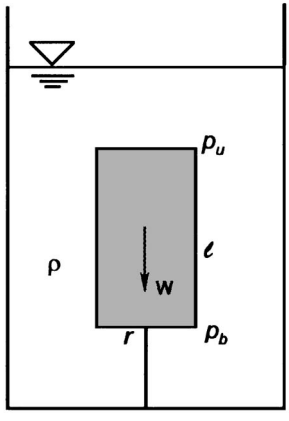

Fig. 6.1

Solution. Let p_u and p_b be the pressure at the upper and the bottom surface of the cylinder. Let T be the tension in the rope. Then the equilibrium of the cylindrical body requires that

$$p_b(\pi r^2) - p_u(\pi r^2) - W - T = 0 \tag{i}$$

That is,

$$T = \pi r^2(p_b - p_u) - W \tag{ii}$$

Now, from Eq. (6.3.5)

$$p_b - p_u = \rho g l \tag{iii}$$

Thus,

$$T = \pi r^2 \rho g l - W \tag{iv}$$

We note that the first term on the right hand side of the above equation is the buoyancy force which is equal to the weight of the liquid displaced by the body.

Example 6.3.2

In Fig. 6.2, the weight W_R is supported by the weight W_L, via the liquids in the container. The area under W_R is twice that under W_L. Find W_R in terms of $W_L, \rho_1, \rho_2, A_L, h$ ($\rho_2 < \rho_1$ and assume no mixing).

Solution. Using Eq. (6.3.5), we have

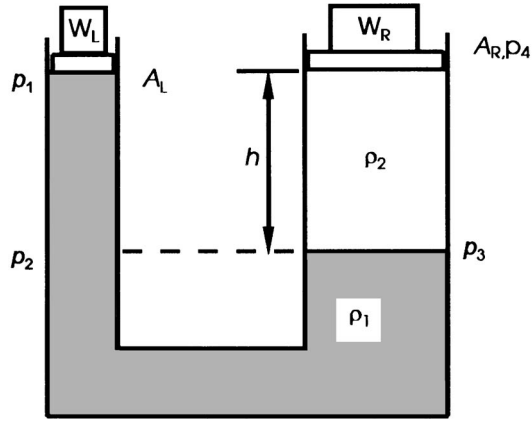

Fig. 6.2

$$p_2 = p_1 + \rho_1 g h \tag{i}$$

$$p_3 = p_2 = p_1 + \rho_1 gh \tag{ii}$$

$$p_4 = p_3 - \rho_2 gh = p_1 + (\rho_1 - \rho_2)gh \tag{iii}$$

Thus,

$$W_R = (p_4)(A_R) = (p_1)(A_R) + (\rho_1 - \rho_2)ghA_R \tag{iv}$$

i.e.,

$$W_R = 2p_1 A_L + 2(\rho_1 - \rho_2)ghA_L = 2W_L + 2(\rho_1 - \rho_2)ghA_L \tag{v}$$

Example 6.3.3

A tank containing a homogeneous fluid moves horizontally to the right with a constant acceleration a (Fig. 6.3), (a) find the angle θ of the inclination of the free surface and (b) find the pressure at any point P inside the fluid.

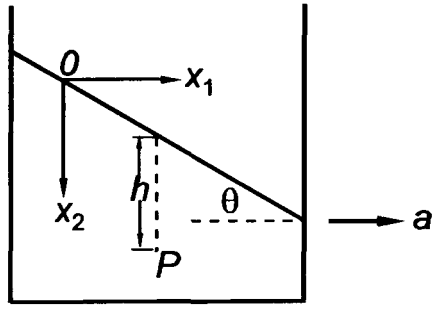

Fig. 6.3

Solution. (a) With $a_1 = a$, $a_2 = a_3 = 0$, $B_1 = B_2 = 0$ and $B_3 = g$, the equations of motion, Eqs. (6.3.6) become

$$\rho a = -\frac{\partial p}{\partial x_1} \tag{i}$$

$$0 = -\frac{\partial p}{\partial x_2} \tag{ii}$$

$$0 = -\frac{\partial p}{\partial x_3} + \rho g \tag{iii}$$

From Eq. (ii), p is independent of x_2, from Eq. (i)

$$p = -\rho a x_1 + f(x_3) \tag{iv}$$

and from Eqs. (iii) and (iv)

$$\frac{\partial p}{\partial x_3} = \frac{df}{dx_3} = \rho g$$

Thus,

$$f(x_3) = \rho g x_3 + \text{ constant.}$$

i.e.,

$$p = -\rho a x_1 + \rho g x_3 + c \tag{v}$$

The integration constant c can be determined from the fact that on the free surface, the pressure is equal to the ambient pressure p_o. Let the origin of the coordinate axes (fixed with respect to the earth) be located at a point on the free surface at the instant of interest, then

$$c = p_o$$

Thus, the pressure inside the fluid at any point is given by

$$p = -\rho a x_1 + \rho g x_3 + p_o \tag{vi}$$

To find the equation for the free surface, we substitute $p = p_o$ in Eq. (vi) and obtain

$$x_3 = \frac{a}{g} x_1 \tag{vii}$$

Thus, the free surface is a plane with the angle of inclination given by

$$\tan\theta = \frac{dx_3}{dx_1} = \frac{a}{g} \tag{viii}$$

(b) Referring to Fig. 6.3, we have $(x_3 - h)/x_1 = \tan\theta$, thus, $x_3 = h + x_1(a/g)$, therefore

$$p = -\rho a x_1 + \rho g\left(h + \frac{x_1 a}{g}\right) + p_o = \rho g h + p_o \tag{ix}$$

i.e., the pressure at any point inside the fluid depends only on the depth h of that point from the free surface directly above it and the pressure at the free surface.

Example 6.3.4

For minor altitude differences, the atmosphere can be assumed to have constant temperature. Find the pressure and density distributions for this case.

Solution. Let the positive x_3-axis be pointing vertically upward, then $\mathbf{B} = -g\mathbf{e}_3$ so that

$$\frac{\partial p}{\partial x_1} = 0 \tag{i}$$

$$\frac{\partial p}{\partial x_2} = 0 \tag{ii}$$

$$\frac{\partial p}{\partial x_3} = -\rho g \tag{iii}$$

From Eqs. (i) and (ii), we see p is a function of x_3 only, thus Eq. (iii) becomes

$$\frac{dp}{dx_3} = -\rho g \tag{iv}$$

Assuming that p, ρ and Θ (absolute temperature) are related by the equation of state for ideal gas, we have

$$p = \rho R\Theta \tag{v}$$

where R is the gas constant for air. Thus, Eq. (iv) becomes

$$\frac{dp}{p} = -\frac{g}{R\Theta}dx_3. \tag{vi}$$

Integrating, we get

$$\ln p = -\frac{g}{R\Theta}x_3 + \ln p_o, \tag{vii}$$

where p_o is the pressure at the ground ($x_3 = 0$), thus,

$$p = p_o e^{(-g/R\Theta)x_3} \tag{viii}$$

and from Eq. (v), if ρ_o is the density at $x_3 = 0$, we have

$$\rho = \rho_o e^{(-g/R\Theta)x_3} \tag{ix}$$

6.4 Newtonian Fluid

When a shear stress is applied to an elastic solid, it deforms from its initial configuration and reaches an equilibrium state with a nonzero shear deformation, the deformation will disappear when the shear stress is removed. When a shear stress is applied to a layer of fluid (such as water, alcohol, mercury, air etc.) it will deform from its initial configuration and eventually reaches a steady state where the fluid continuously deforms with a nonzero rate of shear, as long as the stress is applied. When the shear stress is removed, the fluid will simply remain at the deformed state, obtained prior to the removal of the force. Thus, the state of

shear stress for a fluid in shearing motion is independent of shear deformation, but is dependent on the rate of shear. For such fluids, no shear stress is needed to maintain a given amount of shear deformation, but a definite amount of shear stress is needed to maintain a constant rate of shear of deformation.

Since the state of stress for a fluid under rigid body motion (including rest) is given by an isotropic tensor, therefore in dealing with a fluid in general motion, it is natural to decompose the stress tensor into two parts:

$$\mathbf{T} = -p\mathbf{I}+\mathbf{T}' \tag{6.4.1a}$$

$$T_{ij} = -p\delta_{ij}+T_{ij}' \tag{6.4.1b}$$

where the components of $\mathbf{T}'$ depend only on the rate of deformation (i.e., not on deformation) in such a way that they are zero when the fluid is under rigid body motion (i.e., zero rate of deformation) and p is a scalar whose value is not to depend explicitly on the rate of deformation.

We now define a class of idealized materials called **Newtonian** fluids as follows:

I. For every material point, the values of T_{ij}' at any time t depend linearly on the components of the rate of deformation tensor

$$D_{ij} = \frac{1}{2}\left(\frac{\partial v_i}{\partial x_j}+\frac{\partial v_j}{\partial x_i}\right) \tag{6.4.2}$$

at that time and not on any other kinematic quantities (such as higher rates of deformation)

II. The fluid is isotropic with respect to any configuration.

Following the same arguments made in connection with the isotropic linear elastic material, we obtain that for a Newtonian fluid, (also known as **linearly viscous fluid**, the most general form of T_{ij}' is, with $\Delta \equiv D_{11}+D_{22}+D_{33}=D_{kk}$,

$$T_{ij}' = \lambda\Delta\delta_{ij}+2\mu D_{ij} \tag{6.4.3}$$

where λ and μ are material constants (different from those of an elastic body) having the dimension of (Force)(Time)/(Length)^2. The stress tensor T_{ij}' is known as the **viscous stress tensor.** Thus, the total stress tensor is

$$T_{ij} = -p\delta_{ij}+\lambda\Delta\delta_{ij}+2\mu D_{ij} \tag{6.4.4}$$

i.e.,

$$T_{11} = -p+\lambda\Delta+2\mu D_{11} \tag{6.4.5a}$$

$$T_{22} = -p+\lambda\Delta+2\mu D_{22} \tag{6.4.5b}$$

$$T_{33} = -p+\lambda\Delta+2\mu D_{33} \tag{6.4.5c}$$

$$T_{12} = 2\mu D_{12} \tag{6.4.5d}$$

$$T_{13} = 2\mu D_{13} \tag{6.4.5e}$$

$$T_{23} = 2\mu D_{23} \tag{6.4.5f}$$

The scalar p in the above equations is called the **pressure.** It is a somewhat ambiguous terminology. As is seen from the above equations, when D_{ij} are nonzero, p is only a part of the total compressive normal stress on a plane. It is in general neither the total compressive normal stress on a plane (unless the viscous stress components happen to be zero), nor the mean normal compressive stress, (see next section). As a fluid theory, it is only necessary to remember that the isotropic tensor $-p\delta_{ij}$ is that part of T_{ij} which does not depend explicitly on the rate of deformation.

6.5 Interpretation of λ and μ

Consider the shear flow given by the velocity field:

$$v_1 = v_1(x_2),\ v_2 = 0,\ v_3 = 0 \tag{i}$$

For this flow

$$D_{11} = D_{22} = D_{33} = D_{13} = D_{23} = 0 \tag{ii}$$

and

$$D_{12} = \frac{1}{2}\frac{dv_1}{dx_2} \tag{iii}$$

so that

$$T_{11} = T_{22} = T_{33} = -p,\ T_{13} = T_{23} = 0 \tag{iv}$$

and

$$T_{12} = \mu\frac{dv_1}{dx_2} \tag{6.5.1}$$

Thus, μ is the proportionality constant relating the shearing stress to the rate of decrease of angle between two mutually perpendicular material lines (see Sect.3.13). It is called the **first coefficient of viscosity** or simply **viscosity**. From Eq. (6.4.3), we have, for a general velocity field.

$$\frac{1}{3}T_{ii}' = (\lambda + \frac{2}{3}\mu)\Delta \tag{6.5.2}$$

Thus, $(\lambda+\frac{2}{3}\mu)$ is the proportionality constant relating the viscous mean normal stress to the rate of change of volume. It is known as the **coefficient of bulk viscosity**. The total mean normal stress is given by

$$\frac{1}{3}T_{ii} = -p+(\lambda+\frac{2}{3}\mu)\Delta \tag{6.5.3}$$

and it is clear that the so-called pressure is in general not the mean normal stress, except when either $\Delta = 0$ or $(\lambda+\frac{2}{3}\mu)$ is assumed to be zero.

Example 6.5.1

Given the following velocity field:

$$v_1 = -c\,(x_1+x_2),\ v_2 = c\,(x_2-x_1),\ v_3 = 0\,,\quad c = 1\ \mathrm{s}^{-1} \tag{i}$$

for a Newtonian liquid with viscosity $\mu = 0.982$ mPa·s (2.05×10^{-5} lb·s/ft^2). For a plane whose normal is in the $\mathbf{e}_1$-direction, (a) find the excess of the total normal compressive stress over the pressure p, and (b) find the magnitude of the shearing stress.

Solution. From

$$T_{11} = -p+2\mu D_{11}\quad (\Delta = 0) \tag{ii}$$

we have

$$(-T_{11})-p = -2\mu D_{11} \tag{iii}$$

Now, from Eq. (i),

$$D_{11} = \frac{\partial v_1}{\partial x_1} = -c = -1\ \mathrm{s}^{-1} \tag{iv}$$

Therefore

$$(-T_{11})-p = -2(0.982)(-1) = 1.96\ \mathrm{mPa} \tag{v}$$

(b)

$$T_{12} = 2\mu D_{12} = \mu\left(\frac{\partial v_1}{\partial x_2}+\frac{\partial v_2}{\partial x_1}\right) = -2\,c\,\mu = -1.96\ \mathrm{mPa} \tag{vi}$$

$$T_{13} = 2\mu D_{13} = \mu\left(\frac{\partial v_1}{\partial x_3}+\frac{\partial v_3}{\partial x_1}\right) = 0 \tag{vii}$$

Thus, the magnitude of shearing stress equals 1.96 mPa.

6.6 Incompressible Newtonian Fluid

For an incompressible fluid, $\Delta \equiv D_{ii} = 0$ at all times. Thus, the constitutive equation for such a fluid becomes

$$T_{ij} = -p\delta_{ij}+2\mu D_{ij} \tag{6.6.1}$$

We see from this equation that

$$T_{ii} = -3p+2\mu D_{ii} = -3p$$

Thus,

$$p = \frac{-T_{ii}}{3} \tag{6.6.2}$$

Therefore, for an incompressible viscous fluid, the pressure has the meaning of the mean normal compressive stress. The value of p does not depend explicitly on any kinematic quantities; its value is indeterminate as far as the fluid's mechanical behavior is concerned. In other words, since the fluid is incompressible, one can superpose any pressure to the fluid, without affecting its mechanical behavior. Thus, the pressure in an incompressible fluid is often known constitutively as the "indeterminate pressure". In any given problem with prescribed boundary condition(s) for the pressure, the pressure field is determinate.

Since

$$D_{ij} = \frac{1}{2}\left(\frac{\partial v_i}{\partial x_j}+\frac{\partial v_j}{\partial x_i}\right) \tag{6.3}$$

where v_i are the velocity components, the constitutive equations can be written:

$$T_{ij} = -p\delta_{ij}+\mu\left(\frac{\partial v_i}{\partial x_j}+\frac{\partial v_j}{\partial x_i}\right) \tag{6.6.4}$$

i.e.,

$$T_{11} = -p+2\mu\frac{\partial v_1}{\partial x_1} \tag{6.6.4a}$$

$$T_{22} = -p+2\mu\frac{\partial v_2}{\partial x_2} \tag{6.6.4b}$$

$$T_{33} = -p+2\mu\frac{\partial v_3}{\partial x_3} \tag{6.6.4c}$$

$$T_{12} = \mu\left(\frac{\partial v_1}{\partial x_2}+\frac{\partial v_2}{\partial x_1}\right) \tag{6.6.4d}$$

$$T_{13} = \mu\left(\frac{\partial v_1}{\partial x_3}+\frac{\partial v_3}{\partial x_1}\right) \tag{6.6.4e}$$

$$T_{23} = \mu\left(\frac{\partial v_2}{\partial x_3}+\frac{\partial v_3}{\partial x_2}\right) \tag{6.6.4f}$$

6.7 Navier-Stokes Equation For Incompressible Fluids

Substituting the constitutive equation [Eq. (6.6.4)] into the equation of motion, Eq. (4.7.2)

$$\rho\left(\frac{\partial v_i}{\partial t}+v_j\frac{\partial v_i}{\partial x_j}\right) = \rho B_i+\frac{\partial T_{ij}}{\partial x_j} \tag{6.7.1}$$

and noting that

$$\frac{\partial T_{ij}}{\partial x_j} = -\frac{\partial p}{\partial x_j}\delta_{ij}+\mu\frac{\partial^2 v_i}{\partial x_j\partial x_j}+\mu\frac{\partial^2 v_j}{\partial x_j\partial x_i} = -\frac{\partial p}{\partial x_i}+\mu\frac{\partial^2 v_i}{\partial x_j\partial x_j}+\mu\frac{\partial}{\partial x_i}\left(\frac{\partial v_j}{\partial x_j}\right)$$

$$= -\frac{\partial p}{\partial x_i}+\mu\frac{\partial^2 v_i}{\partial x_j\partial x_j} \qquad \left(\frac{\partial v_j}{\partial x_j} = 0\right)$$

we obtain the following equations of motion in terms of velocity components

$$\rho\left(\frac{\partial v_i}{\partial t}+v_j\frac{\partial v_i}{\partial x_j}\right) = \rho B_i-\frac{\partial p}{\partial x_i}+\mu\frac{\partial^2 v_i}{\partial x_j\partial x_j} \tag{6.7.2}$$

i.e.,

$$\rho\left(\frac{\partial v_1}{\partial t}+v_1\frac{\partial v_1}{\partial x_1}+v_2\frac{\partial v_1}{\partial x_2}+v_3\frac{\partial v_1}{\partial x_3}\right) = \rho B_1-\frac{\partial p}{\partial x_1}+\mu\left(\frac{\partial^2}{\partial x_1^2}+\frac{\partial^2}{\partial x_2^2}+\frac{\partial^2}{\partial x_3^2}\right)v_1 \tag{6.7.2a}$$

$$\rho\left(\frac{\partial v_2}{\partial t}+v_1\frac{\partial v_2}{\partial x_1}+v_2\frac{\partial v_2}{\partial x_2}+v_3\frac{\partial v_2}{\partial x_3}\right) = \rho B_2-\frac{\partial p}{\partial x_2}+\mu\left(\frac{\partial^2}{\partial x_1^2}+\frac{\partial^2}{\partial x_2^2}+\frac{\partial^2}{\partial x_3^2}\right)v_2 \tag{6.7.2b}$$

$$\rho\left(\frac{\partial v_3}{\partial t}+v_1\frac{\partial v_3}{\partial x_1}+v_2\frac{\partial v_3}{\partial x_2}+v_3\frac{\partial v_3}{\partial x_3}\right) = \rho B_3-\frac{\partial p}{\partial x_3}+\mu\left(\frac{\partial^2}{\partial x_1^2}+\frac{\partial^2}{\partial x_2^2}+\frac{\partial^2}{\partial x_3^2}\right)v_3 \tag{6.7.2c}$$

Or, in invariant form:

$$\rho\left[\frac{\partial \mathbf{v}}{\partial t}+(\nabla\mathbf{v})\mathbf{v}\right] = \rho\mathbf{B}-\nabla p+\mu\,\mathrm{div}(\nabla\mathbf{v}) \tag{6.7.2d}$$

These are known as the **Navier-Stokes Equations** of motion for incompressible Newtonian fluid. There are four unknown functions v_1, v_2, v_3 and p in the three equations. The fourth equation is supplied by the continuity equation $\Delta = 0$, i.e.,

$$\frac{\partial v_1}{\partial x_1}+\frac{\partial v_2}{\partial x_2}+\frac{\partial v_3}{\partial x_3} = 0 \tag{6.7.3a}$$

or, in invariant form,

$$\operatorname{div} \mathbf{v} = 0 \tag{6.7.3b}$$

Example 6.7.1

If all particles have their velocity vectors parallel to a fixed direction, the flow is said to be a **parallel flow** or a **uni-directional flow**. Show that for parallel flows of an incompressible linearly viscous fluid, the total normal compressive stress at any point on any plane parallel to and perpendicular to the direction of flow is the pressure p.

Solution. Let the direction of the flow be the x_1-axis, then

$$v_2 = 0,\ v_3 = 0 \tag{i}$$

and from the equation of continuity,

$$\frac{\partial v_1}{\partial x_1} = 0 \tag{ii}$$

Thus, the velocity field for a parallel flow is

$$v_1 = v_1(x_2, x_3, t),\ v_2 = 0,\ v_3 = 0 \tag{iii}$$

For this flow,

$$D_{11} = D_{22} = D_{33} = 0 \tag{iv}$$

thus,

$$T_{11} = T_{22} = T_{33} = -p \tag{v}$$

Example 6.7.2

Let z-axis be pointing vertically upward and let

$$h = \frac{p}{\rho g}+z \tag{6.7.4}$$

where ρ is density and g is gravitational acceleration. The quantity h is known as the **piezometric head.** Show that for a uni-direction flow in any direction, the piezometric head is a constant along any direction which is perpendicular to the flow.

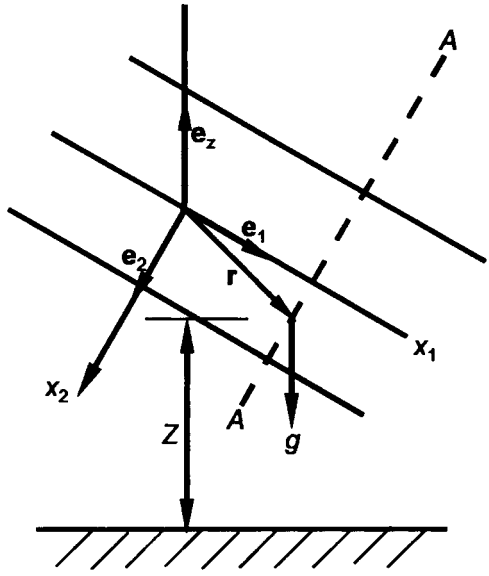

Fig. 6.4

Solution. Let x_1-axis be the direction of flow, then,

$$v_2 = v_3 = 0 \tag{i}$$

Thus, from Eqs. (6.7.2 b and c)

$$\rho B_2 - \frac{\partial p}{\partial x_2} = 0 \tag{ii}$$

$$\rho B_3 - \frac{\partial p}{\partial x_3} = 0 \tag{iii}$$

With z-axis pointing upward, the body force per unit mass **B** is given by:

$$\mathbf{B} = -g\mathbf{e}_z \tag{iv}$$

where $\mathbf{e}_z$ is the unit vector in the z-direction. Thus,

$$B_2 = \mathbf{B}\cdot\mathbf{e}_2 = -g(\mathbf{e}_z\cdot\mathbf{e}_2) \tag{v}$$

Now, Eq. (v) can be written

$$B_2 = -g\frac{\partial}{\partial x_2}[\,(\mathbf{e}_z\cdot\mathbf{e}_1)x_1+(\mathbf{e}_z\cdot\mathbf{e}_2)x_2+(\mathbf{e}_z\cdot\mathbf{e}_3)x_3] \tag{vi}$$

Let $\mathbf{r}$ be the position vector for a particle at $\mathbf{x}$, then

$$\mathbf{r} = x_1\mathbf{e}_1+x_2\mathbf{e}_2+x_3\mathbf{e}_3$$

and

$$z = \mathbf{e}_z\cdot\mathbf{r} = (\mathbf{e}_z\cdot\mathbf{e}_1)x_1+(\mathbf{e}_z\cdot\mathbf{e}_2)x_2+(\mathbf{e}_z\cdot\mathbf{e}_3)x_3 \tag{vii}$$

Thus, Eq. (vi) can be written

$$B_2 = -\frac{\partial}{\partial x_2}(gz) \tag{viii}$$

Using Eqs(ii) and (viii), we obtain

$$\frac{\partial}{\partial x_2}(p+\rho gz) = 0 \tag{ix}$$

or,

$$\frac{\partial}{\partial x_2}\left(\frac{p}{\rho g}+z\right) = 0 \tag{x}$$

Similar derivation will give

$$\frac{\partial}{\partial x_3}\left(\frac{p}{\rho g}+z\right) = 0 \tag{xi}$$

Thus, for all points on the same plane which is perpendicular to the direction of flow (e.g., plane *A-A* in Fig. 6.4)

$$\frac{p}{\rho g}+z = \text{constant} \tag{xii}$$

Example 6.7.3

For the uni-directional flow shown in Fig. 6.5, find the pressure at the point A.

Solution. According to the result of the previous example, the piezometric head of the point A and the point B are the same. Thus,

$$\frac{p_A}{\rho g} + z_A = \frac{p_B}{\rho g} + z_B = \frac{p_a}{\rho g} + z_B \tag{i}$$

where p_a is the atmospheric pressure. Thus,

$$p_A = p_a + \rho g\,(z_B - z_A) = p_a + \rho g h \cos\theta \tag{ii}$$

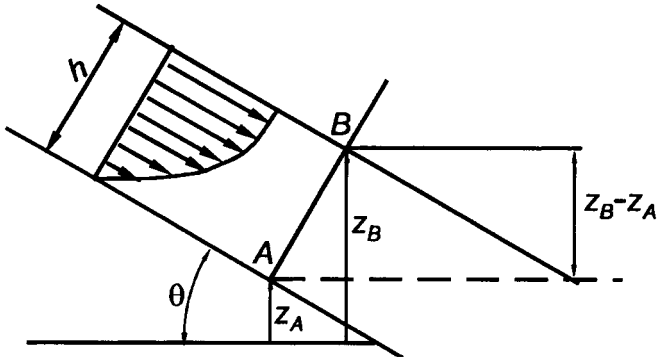

Fig. 6.5

6.8 Navier-Stokes Equations for Incompressible Fluids in Cylindrical and Spherical coordinates

(A) Cylindrical Coordinates

With v_r, v_θ, v_z denoting the velocity components in (r,θ,z) direction, the Navier-Stokes equations for an incompressible Newtonian fluid are: [See Prob. 6.14]

$$\frac{\partial v_r}{\partial t} + v_r\frac{\partial v_r}{\partial r} + \frac{v_\theta}{r}\frac{\partial v_r}{\partial \theta} + v_z\frac{\partial v_r}{\partial z} - \frac{v_\theta^2}{r} = -\frac{1}{\rho}\frac{\partial p}{\partial r} + B_r$$
$$+\frac{\mu}{\rho}\left[\frac{\partial^2 v_r}{\partial r^2} + \frac{1}{r^2}\frac{\partial^2 v_r}{\partial \theta^2} + \frac{\partial^2 v_r}{\partial z^2} + \frac{1}{r}\frac{\partial v_r}{\partial r} - \frac{2}{r^2}\frac{\partial v_\theta}{\partial \theta} - \frac{v_r}{r^2}\right] \tag{6.8.1a}$$

$$\frac{\partial v_\theta}{\partial t} + v_r\frac{\partial v_\theta}{\partial r} + \frac{v_\theta}{r}\frac{\partial v_\theta}{\partial \theta} + v_z\frac{\partial v_\theta}{\partial z} + \frac{v_r v_\theta}{r} = -\frac{1}{\rho r}\frac{\partial p}{\partial \theta} + B_\theta$$
$$+\frac{\mu}{\rho}\left[\frac{\partial^2 v_\theta}{\partial r^2} + \frac{1}{r^2}\frac{\partial^2 v_\theta}{\partial \theta^2} + \frac{\partial^2 v_\theta}{\partial z^2} + \frac{1}{r}\frac{\partial v_\theta}{\partial r} + \frac{2}{r^2}\frac{\partial v_r}{\partial \theta} - \frac{v_\theta}{r^2}\right] \tag{6.8.1b}$$

$$\frac{\partial v_z}{\partial t} + v_r\frac{\partial v_z}{\partial r} + \frac{v_\theta}{r}\frac{\partial v_z}{\partial \theta} + v_z\frac{\partial v_z}{\partial z} = -\frac{1}{\rho r}\frac{\partial p}{\partial z} + B_z$$

$$+\frac{\mu}{\rho}\left[\frac{\partial^2 v_z}{\partial r^2}+\frac{1}{r^2}\frac{\partial^2 v_z}{\partial \theta^2}+\frac{\partial^2 v_z}{\partial z^2}+\frac{1}{r}\frac{\partial v_z}{\partial r}\right] \tag{6.8.1c}$$

The equation of continuity takes the form

$$\frac{1}{r}\frac{\partial}{\partial r}(rv_r)+\frac{1}{r}\frac{\partial v_\theta}{\partial \theta}+\frac{\partial v_z}{\partial z}=0 \tag{6.8.2}$$

(B)Spherical Coordinates. With v_r, v_θ, v_ϕ denoting the velocity components in (r, θ, ϕ) the Navier-Stokes equations for incompressible Newtonian fluid are [see Prob. 6.15]

$$\frac{\partial v_r}{\partial t}+v_r\frac{\partial v_r}{\partial r}+\frac{v_\theta}{r}\frac{\partial v_r}{\partial \theta}+\frac{v_\phi}{r\sin\theta}\frac{\partial v_r}{\partial \phi}-\frac{v_\theta^2+v_\phi^2}{r}=-\frac{1}{\rho}\frac{\partial p}{\partial r}+B_r+\frac{\mu}{\rho}\left[\frac{\partial}{\partial r}\left(\frac{1}{r^2}\frac{\partial}{\partial r}(r^2 v_r)\right)\right.$$

$$\left.+\frac{1}{r^2\sin\theta}\frac{\partial}{\partial\theta}(\sin\theta\frac{\partial v_r}{\partial\theta})+\frac{1}{r^2\sin^2\theta}\frac{\partial^2 v_r}{\partial\phi^2}-\frac{2}{r^2\sin\theta}\frac{\partial}{\partial\theta}(v_\theta\sin\theta)-\frac{2}{r^2\sin\theta}\frac{\partial v_\phi}{\partial\phi}\right] \tag{6.8.3a}$$

$$\frac{\partial v_\theta}{\partial t}+v_r\frac{\partial v_\theta}{\partial r}+\frac{v_\theta}{r}\frac{\partial v_\theta}{\partial \theta}+\frac{v_\phi}{r\sin\theta}\frac{\partial v_\theta}{\partial \phi}+\frac{v_\theta v_r}{r}-\frac{v_\phi^2\cot\theta}{r}=-\frac{1}{\rho r}\frac{\partial p}{\partial\theta}+B_\theta+\frac{\mu}{\rho}\left[\frac{1}{r^2}\frac{\partial}{\partial r}\left(r^2\frac{\partial v_\theta}{\partial r}\right)\right.$$

$$\left.+\frac{1}{r^2}\frac{\partial}{\partial\theta}\left(\frac{1}{\sin\theta}\frac{\partial}{\partial\theta}(v_\theta\sin\theta)\right)+\frac{1}{r^2\sin^2\theta}\frac{\partial^2 v_\theta}{\partial\phi^2}+\frac{2}{r^2}\frac{\partial v_r}{\partial\theta}-\frac{2\cot\theta}{r^2\sin\theta}\frac{\partial v_\phi}{\partial\phi}\right] \tag{6.8.3b}$$

$$\frac{\partial v_\phi}{\partial t}+v_r\frac{\partial v_\phi}{\partial r}+\frac{v_\theta}{r}\frac{\partial v_\phi}{\partial \theta}+\frac{v_\phi}{r\sin\theta}\frac{\partial v_\phi}{\partial \phi}+\frac{v_\phi v_r}{r}+\frac{v_\phi v_\theta\cot\theta}{r}=-\frac{1}{\rho r\sin\theta}\frac{\partial p}{\partial\phi}+B_\phi+\frac{\mu}{\rho}\left[\frac{1}{r^2}\frac{\partial}{\partial r}\left(r^2\frac{\partial v_\phi}{\partial r}\right)\right.$$

$$\left.+\frac{1}{r^2}\frac{\partial}{\partial\theta}\left(\frac{1}{\sin\theta}\frac{\partial}{\partial\theta}(v_\phi\sin\theta)\right)+\frac{1}{r^2\sin^2\theta}\frac{\partial^2 v_\phi}{\partial\phi^2}+\frac{2}{r^2\sin\theta}\frac{\partial v_r}{\partial\phi}+\frac{2\cot\theta}{r^2\sin\theta}\frac{\partial v_\theta}{\partial\phi}\right] \tag{6.8.3c}$$

The equation of continuity takes the form

$$\frac{1}{r^2}\frac{\partial}{\partial r}(r^2 v_r)+\frac{1}{r\sin\theta}\frac{\partial}{\partial\theta}(v_\theta\sin\theta)+\frac{1}{r\sin\theta}\frac{\partial v_\phi}{\partial\phi}=0 \tag{6.8.4}$$

6.9 Boundary Conditions

On a rigid boundary, we shall impose the **non- slip** condition (also known as the adherence condition), i.e., the fluid layer next to a rigid surface moves with that surface, in particular if the surface is at rest, the velocity of the fluid at the surface is zero. The nonslip condition is well supported by experiments for practically all fluids, including those that do not wet the surface (e.g. mercury) and Non-Newtonian fluids (e.g., most polymeric fluids).

6.10 Streamline, Pathline, Streakline, Steady, Unsteady, Laminar and Turbulent Flow

(a) *Streamline.*

A **streamline** at time t is a curve whose tangent at every point has the direction of the instantaneous velocity vector of the particle at the point. Experimentally, streamlines on the surface of a fluid are often obtained by sprinkling it with reflecting particles and making a short-time exposure photograph of the surface. Each reflecting particle produces a short line on the photograph approximating the tangent to a streamline. Mathematically, streamlines can be obtained from the velocity field $\mathbf{v}(\mathbf{x},t)$ as follows:

Let $\mathbf{x} = \mathbf{x}(s)$ be the parametric equation for the streamline at time t, which passes through a given point $\mathbf{x}_o$. Then an s can always be chosen such that

$$\frac{d\mathbf{x}}{ds} = \mathbf{v}(\mathbf{x},t) \tag{6.10.1a}$$

$$\mathbf{x}(0) = \mathbf{x}_o \tag{6.10.1b}$$

Example 6.10.1

Given the velocity field in dimensionless form†

$$v_1 = \frac{x_1}{1+t},\ v_2 = x_2,\ v_3 = 0 \tag{i}$$

find the streamline which passes through the point $(\alpha_1,\alpha_2,\alpha_3)$ at time t

Solution. From

$$\frac{dx_1}{ds} = \frac{x_1}{1+t},$$

we have

$$\int_{\alpha_1}^{x_1} \frac{dx_1}{x_1} = \int_0^s \frac{1}{1+t} ds \tag{ii}$$

Thus,

$$\ln x_1 - \ln \alpha_1 = \frac{s}{1+t}$$

i.e.,

† The example is chosen to demonstrate the differences between streamlines, pathlines and streaklines. The velocity field obviously does not correspond to an incompressible fluid.

$$x_1 = \alpha_1 \exp\left[\frac{s}{1+t}\right] \tag{iii}$$

Similarly, from $dx_2/ds = x_2$, we have

$$\int_{\alpha_2}^{x_2} \frac{dx_2}{x_2} = \int_0^s ds \tag{iv}$$

Thus, $x_2 = \alpha_2 e^s$. Obviously, $x_3 = \alpha_3$.

(ii) *Pathline*

A **pathline** is the path traversed by a fluid particle. To photograph a pathline, it is necessary to use long time exposure of a reflecting particle. Mathematically, the pathline of a particle which was at $\mathbf{X}$ at time t_o can be obtained from the velocity field $\mathbf{v}(\mathbf{x},t)$ as follows: Let $\mathbf{x} = \mathbf{x}(t)$ be the pathline, then

$$\frac{d\mathbf{x}}{dt} = \mathbf{v}(\mathbf{x},t) \tag{6.10.2a}$$

$$\mathbf{x}(t_o) = \mathbf{X} \tag{6.10.2b}$$

Example 6.10.2

For the velocity field of the previous example, find the pathline for a particle which was at (X_1,X_2,X_3) at time t_o

Solution From

$$\frac{dx_1}{dt} = \frac{x_1}{1+t}, \tag{i}$$

we have

$$\int_{X_1}^{x_1} \frac{dx_1}{x_1} = \int_{t_o}^{t} \frac{dt}{1+t} \tag{ii}$$

Thus,

$$\ln x_1 - \ln X_1 = \ln(1+t) - \ln(1+t_o), \tag{iii}$$

i.e.,

$$x_1 = X_1 \frac{1+t}{1+t_o} \tag{iv}$$

Similarly from $dx_2/dt = x_2$, we have

$$\int_{X_2}^{x_2} \frac{dx_2}{x_2} = \int_{t_o}^{t} dt \tag{v}$$

thus

$$x_2 = X_2 e^{t-t_o} \tag{vi}$$

and obviously, $x_3 = X_3$

(iii)*Streakline*

A **streakline** through a fixed point $\mathbf{x}_o$ is the line at time t formed by all the particles which passed through $\mathbf{x}_o$ at $\tau < t$.

Let $\mathbf{X} = \mathbf{X}(\mathbf{x}, t)$ denote the inverse of $\mathbf{x} = \mathbf{x}(\mathbf{X}, t)$, then the particle which was at $\mathbf{x}_o$ at time τ, has the material coordinates given by $\mathbf{X} = \mathbf{X}(\mathbf{x}_o, \tau)$; this same particle is then at $\mathbf{x} = \mathbf{x}(\mathbf{X}(\mathbf{x}_o, \tau), t)$ at time t. Thus, the streakline at time t is given by

$$\mathbf{x} = \mathbf{x}(\mathbf{X}(\mathbf{x}_o, \tau), t) \quad \text{for fixed } t \text{ and variable } \tau \tag{6.10.3}$$

Example 6.10.3

Given the dimensionless velocity field

$$v_1 = \frac{x_1}{1+t}, \; v_2 = x_2, \; v_3 = 0 \tag{i}$$

find the streakline formed by the particles which passed through the spatial position $(\alpha_1, \alpha_2, \alpha_3)$.

Solution. The pathline equations for this velocity field was obtained in Example 6.10.2 to be

$$x_1 = X_1 \frac{1+t}{1+t_o}, \; x_2 = X_2 e^{t-t_o} \; x_3 = X_3 \tag{ii}$$

From which we obtain the inverse equations

$$X_1 = x_1 \frac{1+t_o}{1+t} \;, \; X_2 = x_2 e^{-t+t_o}, \; X_3 = x_3 \tag{iii}$$

Thus, the particle which passes through α_1, α_2, α_3 at time τ is given by

$$X_1 = \alpha_1 \frac{1+t_o}{1+\tau} \;, \; X_2 = \alpha_2 e^{-\tau+t_o}, \; X_3 = \alpha_3 \tag{iv}$$

Substituting Eq. (iv) into Eq. (ii), we obtain the parametric equations for the streakline to be

$$x_1 = \alpha_1 \frac{1+t}{1+\tau}\ ,\ x_2 = \alpha_2 e^{t-\tau}\ ,\ x_3 = \alpha_3$$

Example 6.10.4

Given the two dimensional problem

$$v_1 = kx_2,\ \ v_2 = 0 \tag{i}$$

Obtain (a) the streamline passing through the point (α_1,α_2)

(b) the pathline for the particle (X_1,X_2) and

(c) the streakline for the particles which passed through the point (α_1,α_2)

Solution. (a) From Eq. (i), we have

$$\frac{dx_1}{ds} = kx_2,\ \ \frac{dx_2}{ds} = 0 \tag{ii}$$

thus,

$$x_2 = \alpha_2,\ \ x_1 = \alpha_1 + k\alpha_2 s\ ,\ \ 0 \le s < \infty \tag{iii}$$

This is obviously a straight line parallel to the x_1 axis.

(b) from (i) , we have

$$\frac{dx_1}{dt} = kx_2,\ \ \frac{dx_2}{dt} = 0 \tag{iv}$$

thus ,

$$x_2 = X_2,\ \ x_1 = X_1 + kX_2 t\ ,\qquad 0 \le t < \infty \tag{v}$$

Again, this is a straight line parallel to the x_1 axis.

(c) From the results of (b), we have

$$X_1 = x_1 - kx_2 t,\ \ X_2 = x_2 \tag{vi}$$

therefore,

$$X_1 = \alpha_1 - k\alpha_2 \tau,\ \ X_2 = \alpha_2 \tag{vii}$$

Substituting Eq. (vii) into Eq. (v), we obtain

$$x_1 = \alpha_1 + k\alpha_2 (t-\tau)\ ,\ \ x_2 = \alpha_2\ ,\qquad -\infty \le \tau < t \tag{viii}$$

Again, this is a straight line parallel to the x_1 axis.

(iv)*Steady and Unsteady Flow*

A flow is called **steady** if at every fixed location nothing changes with time. Otherwise, the flow is called **unsteady**. It is important to note, however that in a steady flow, the velocity, acceleration, temperature etc. of a given fluid particle in general changes with time. In other words, let Ψ be any dependent variable, then in a steady flow, $(\partial\Psi/\partial t)_{x-\text{fixed}} = 0$, but $D\Psi/Dt$ is in general not zero. For example, the steady flow given by the velocity field

$$v_1 = x_1,\ v_2 = -x_2,\ v_3 = 0 \tag{i}$$

has an acceleration field given by

$$a_1 = \frac{\partial v_1}{\partial t} + v_1\frac{\partial v_1}{\partial x_1} + v_2\frac{\partial v_1}{\partial x_2} + v_3\frac{\partial v_1}{\partial x_3} = = 0 + x_1(1) + 0 + 0 = x_1 \tag{ii}$$

$$a_2 = \frac{\partial v_2}{\partial t} + v_1\frac{\partial v_2}{\partial x_1} + v_2\frac{\partial v_2}{\partial x_2} + v_3\frac{\partial v_2}{\partial x_3} = = 0 + 0 + (-x_2)(-1) + 0 = x_2 \tag{iii}$$

$$a_3 = 0 \tag{iv}$$

We note that for steady flow the pathlines coincide with the streamlines and streaklines.

(v) *Laminar and Turbulent Flow*

A **laminar** flow is a very orderly flow in which the fluid particles move in smooth layers, or laminae, sliding over particles in adjacent laminae without mixing with them. Such flow are generally realized at slow speed. For the case of water flowing through a tube of circular cross-section, it was found by Reynolds who observed the thin filaments of dye in the tube, that when the dimensionless parameter N_R (now known as **Reynolds number**) defined by

$$N_R = \frac{v_m \rho d}{\mu} \tag{6.10.3}$$

[where v_m is the average velocity in the pipe, d the diameter of the pipe, and ρ and μ the density and viscosity of the fluid], is less than a certain value (approximately 2100), the thin filament of dye was maintained intact throughout the tube, forming straight lines parallel to the axis of the tube. Any accidental disturbances were rapidly obliterated. As the Reynolds number is increased the flow becomes increasingly sensitive to small perturbations until a stage is reached wherein the dye filament broke and diffused through the flowing water. This phenomenon of irregular intermingling of fluid particle in the flow is termed **turbulent**. In the case of pipe flow, the upper limit of the Reynolds number, beyond which the flow is turbulent, is indeterminate. Depending on the experimental setup and the initial quietness of fluid, this upper limit can be as high as 100,000.

In the following sections, we restrict ourselves to the study of laminar flows only. It is therefore to be understood that the solutions to be presented are valid only within certain limits of some parameter (such as Reynolds number) governing the stability of the flow.

In the following sections, we shall present some examples of laminar flows of an incompressible Newtonian fluid.

6.11 Plane Couette Flow

The steady unidirectional flow, under zero pressure gradient in the flow direction, of an incompressible viscous fluid between two horizontal plates of infinite extent, one fixed and the other moving in its own plane with a constant velocity v_o is known as the **plane Couette flow** (Fig. 6.6).

Let x_1 be the direction of the flow. Then $v_2 = v_3 = 0$. It follows from the continuity equation that v_1 can not depend on x_1. Let x_1x_2 plane be the plane of flow, then the velocity field for the plane Couette flow is of the form

$$v_1 = v(x_2),\ v_2 = 0,\ v_3 = 0 \tag{i}$$

From the Navier-Stokes equation and the boundary conditions $v(0) = 0$ and $v(d) = v_o$, it can be shown (we leave it as an exercise) that

$$v(x_2) = \frac{v_o x_2}{d} \tag{6.11.1}$$

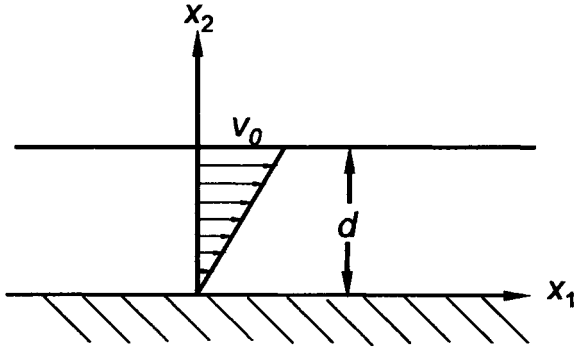

Fig. 6.6

6.12 Plane-Poiseuille Flow

The plane Poiseuille flow is the two-dimensional steady unidirectional flow between two fixed plates of infinite extent. Let x_1 be the direction of flow, x_2 be perpendicular to the boundary plates and the flow be unbounded in the x_3 direction. Then the velocity field is of the following form:

$$v_1 = v(x_2),\ v_2 = 0 \text{ and } v_3=0$$

Let us first consider the case where gravity is neglected. We shall show later that the presence of gravity does not at all affect the flow field, it only modifies the pressure field.

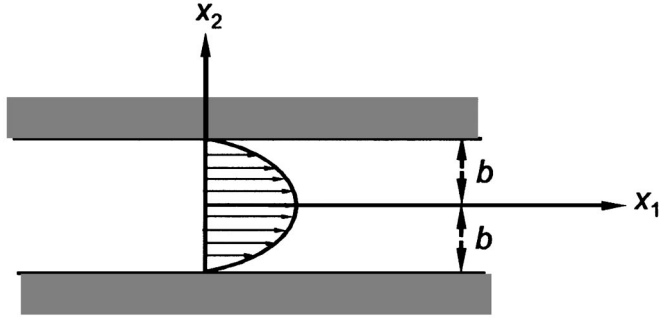

Fig. 6.7

In the absence of body forces, the Navier-Stokes equations, Eqs. (6.7.2) yield:

$$\frac{\partial p}{\partial x_1} = \mu \frac{d^2 v}{d x_2^2} \tag{6.12.1a}$$

$$\frac{\partial p}{\partial x_2} = 0 \tag{6.12.1b}$$

$$\frac{\partial p}{\partial x_3} = 0 \tag{6.12.1c}$$

Equations (6.12.1b) and (6.12.1c) state that p does not depend on x_2 and x_3. If we differentiate Eq. (6.12.1a) with respect to x_1, and noting that the right hand side is a function of x_2 only, we obtain

$$\frac{d^2 p}{dx_1^2} = 0 \tag{i}$$

Thus,

$$\frac{dp}{dx_1} = \text{a constant} \tag{ii}$$

i.e., in plane Poiseuille flow, the pressure gradient is a constant along the flow direction. This pressure gradient is the driving force for the flow. Let

$$\frac{dp}{dx_1} = -\alpha \tag{6.12.2}$$

so that a positive α corresponds to the case where the pressure decreases along the flow direction, then Eq. (6.12.1a) becomes

$$-\alpha = \mu\frac{d^2v}{dx_2^2} \tag{iii}$$

Integrating, one gets

$$\mu\frac{dv}{dx_2} = -\alpha x_2 + C$$

and

$$\mu v = -\frac{\alpha x_2^2}{2} + Cx_2 + D$$

Referring to Fig. 6.7, the boundary conditions are:

$$v(-b) = v(+b) = 0 \tag{iv}$$

thus, the solution is:

$$v(x_2) = \frac{\alpha}{2\mu}(b^2 - x_2^2) \tag{6.12.3}$$

Thus, the velocity profile is a parabola, with a maximum velocity at the mid-channel given by

$$v_{\max} = \frac{\alpha}{2\mu}b^2 \tag{6.12.4}$$

The flow volume per unit time per unit width passing any cross-section can be obtained by integration:

$$Q = \int_{-b}^{b} v\,dx_2 = \frac{\alpha}{\mu}\left(\frac{2b^3}{3}\right) \tag{6.12.5}$$

The average velocity is

$$\bar{v} = \frac{Q}{2b} = \frac{\alpha}{\mu}\frac{b^2}{3} \tag{6.12.6}$$

We shall now prove that in the presence of gravity and independent of the inclination of the channel, the Poiseuille flow always has the velocity profile given by Eq. (6.12.3).

Let **k** be a unit vector pointing upward in the vertical direction, then the body force is:

$$\mathbf{B} = -g\mathbf{k} \tag{6.12.7}$$

and the components of the body force in the x_1, x_2 and x_3 directions are:

$$B_1 = -g\mathbf{e}_1\cdot\mathbf{k} \qquad B_2 = -g\mathbf{e}_2\cdot\mathbf{k} \qquad B_3 = -g\mathbf{e}_3\cdot\mathbf{k} \tag{v}$$

Let **r** be the position vector of a fluid particle and let y be its vertical coordinate. Then

$$\mathbf{r} = x_1\mathbf{e}_1+x_2\mathbf{e}_2+x_3\mathbf{e}_3 \tag{vi}$$

and

$$y = \mathbf{r}\cdot\mathbf{k} = x_1(\mathbf{e}_1\cdot\mathbf{k})+x_2(\mathbf{e}_2\cdot\mathbf{k})+x_3(\mathbf{e}_3\cdot\mathbf{k}) \tag{vii}$$

Now, using Eq. (vii) we can write the body force components Eq. (v) as follows:

$$B_1 = -g\frac{\partial y}{\partial x_1} \qquad B_2 = -g\frac{\partial y}{\partial x_2} \qquad B_3 = -g\frac{\partial y}{\partial x_3} \tag{viii}$$

Thus, the Navier-Stokes equations can be written

$$0 = -\frac{\partial(p+\rho gy)}{\partial x_1}+\mu\frac{\partial^2 v}{\partial x_2} \tag{6.12.8a}$$

$$0 = -\frac{\partial(p+\rho gy)}{\partial x_2} \tag{6.12.8b}$$

$$0 = -\frac{\partial(p+\rho gy)}{\partial x_3} \tag{6.12.8c}$$

These equations are the same as Eqs. (6.12.1) except that the pressure p is replaced by $p+\rho gy$. From these equations, one clearly will obtain the same parabolic velocity profile, except that the driving force in this case is the gradient of $p+\rho gy$ in the flow direction , instead of simply the gradient of p. We note that [p /(ρg) + y] has been defined in Example 6.7.2 as the **piezometric head**. We can also say that the driving force is the gradient of the piezometric head and the piezometric head is a constant along any direction perpendicular to the flow.

6.13 Hagen-Poiseuille Flow

The so-called **Hagen-Poiseuille flow** is a steady unidirectional axisymmetric flow in a circular cylinder. Thus, we look for the velocity field in cylindrical coordinates in the following form

$$v_r = 0,\ v_\theta = 0,\ v_z = v(r) \tag{i}$$

The velocity field given by Eq. (i) obviously satisfies the equation of continuity:

$$\frac{1}{r}\frac{\partial}{\partial r}(rv_r)+\frac{1}{r}\frac{\partial v_\theta}{\partial \theta}+\frac{\partial v_z}{\partial z}=0 \tag{ii}$$

for any $v(r)$.

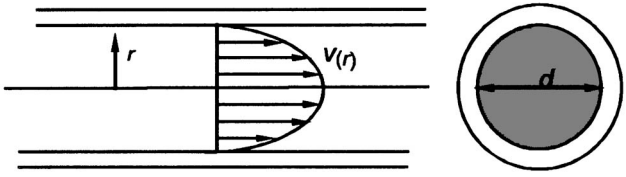

Fig. 6.8

In the absence of body forces, the Navier-Stokes equations, in cylindrical coordinates for the velocity field of Eq. (i) are :

$$0=-\frac{\partial p}{\partial r} \tag{6.13.1a}$$

$$0=-\frac{\partial p}{\partial \theta} \tag{6.13.1b}$$

$$0=-\frac{\partial p}{\partial z}+\mu\left[\frac{1}{r}\frac{d}{dr}\left(r\frac{dv}{dr}\right)\right] \tag{6.13.1c}$$

From Eqs. (6.13.1a) and (6.13.1b), we see that p depends only on z and from Eq. (6.13.1c), we have

$$\frac{d^2p}{dz^2}=0 \tag{i}$$

thus, dp/dz is a constant. Let

$$\alpha \equiv -\frac{dp}{dz} \tag{6.13.2}$$

then

$$-\frac{\alpha}{\mu}=\frac{1}{r}\frac{d}{dr}\left(r\frac{dv}{dr}\right) \tag{ii}$$

Thus,

$$\frac{dv}{dr} = -\frac{\alpha r}{2\mu} + \frac{b}{r} \tag{iii}$$

and

$$v = -\frac{\alpha r^2}{4\mu} + b \ln r + c \tag{iv}$$

Since v must be bounded in the flow region, the integration constant b must be zero. Now, the nonslip condition on the cylindrical wall demands that

$$v = 0 \text{ at } r = \frac{d}{2} \tag{v}$$

where d is the diameter of the pipe, thus

$$c = \frac{\alpha}{\mu}\left(\frac{d^2}{16}\right) \tag{vi}$$

and

$$v = \frac{\alpha}{4\mu}\left(\frac{d^2}{4} - r^2\right) \tag{6.13.3}$$

The above equation states that the velocity over the cross- section is distributed in the form of a paraboloid of revolution.

The maximum velocity is (at $r = 0$)

$$v_{\max} = \frac{\alpha d^2}{16\mu} \tag{6.13.4}$$

The mean velocity $\bar{v}$ is

$$\bar{v} = \frac{1}{(\pi d^2/4)}\int_A v dA = \frac{\alpha d^2}{32\mu} = \frac{v_{\max}}{2} \tag{6.13.5}$$

and the volume rate of flow Q is

$$Q = \left(\frac{\pi d^2}{4}\right) \cdot \bar{v} = \frac{\alpha \pi d^4}{128\mu} \tag{6.13.6a}$$

where

$$\alpha = -dp/dz \tag{6.13.6b}$$

As in the case of plane Poiseuille flow, if the effect of gravity is included, the velocity profile in the pipe remains the same as that given by Eq. (6.13.3), however, the driving force now is

the gradient of $(p+\rho gy)$ where y is the vertical height measured from some reference datum, and the piezometric head $(p/\rho g+y)$ is a constant along any direction perpendicular to the flow. [see Example 6.7.2].

6.14 Plane Couette Flow of Two Layers of Incompressible Fluids

Let the viscosity and the density of the top layer be μ_1 and ρ_1 and those of the bottom layer be μ_2 and ρ_2. Let x_1 be the direction of flow and let $x_2 = 0$ be the interface. We look for steady unidirectional flows of the two layers between the infinite plates $x_2 = +b_1$ and $x_2 = -b_2$. The plate $x_2 = -b_2$ is fixed and the plate $x_2 = +b_1$ is moving on its own plane with velocity v_o. The pressure gradient in the flow direction is assumed to be zero. (Fig. 6.9).

Let the velocity distribution in the top layer be

$$v_1^{(1)} = v^{(1)}(x_2),\ v_2^{(1)} = v_3^{(1)} = 0 \tag{i}$$

and that in the bottom layer be

$$v_1^{(2)} = v^{(2)}(x_2),\ v_2^{(2)} = v_3^{(2)} = 0 \tag{ii}$$

the equation of continuity is clearly satisfied for each layer. The Navier-Stokes equations give:

For layer 1,

$$0 = \mu_1 \frac{d^2 v^{(1)}}{dx_2^2} \tag{6.14.1a}$$

$$0 = -\frac{\partial p^{(1)}}{\partial x_2} - \rho_1 g \tag{6.14.1b}$$

$$0 = -\frac{\partial p^{(1)}}{\partial x_3} \tag{6.14.1c}$$

For layer 2,

$$0 = \mu_2 \frac{d^2 v^{(2)}}{dx_2^2} \tag{6.14.2a}$$

$$0 = -\frac{\partial p^{(2)}}{\partial x_2} - \rho_2 g \tag{6.14.2b}$$

$$0 = -\frac{\partial p^{(2)}}{\partial x_3} \tag{6.14.2c}$$

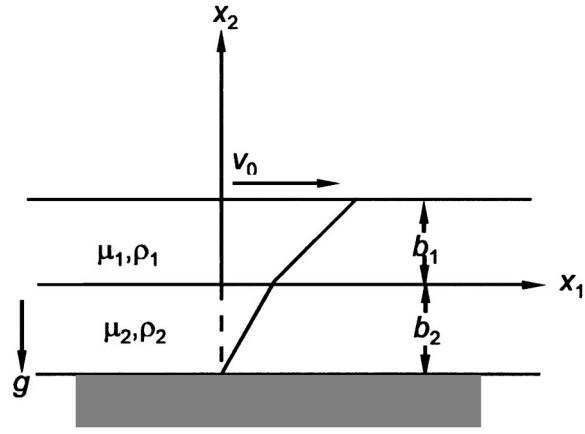

Fig. 6.9

From Eqs. (6.14.1),

$$v^{(1)} = A_1 x_2 + B_1 \text{ and } p^{(1)} = -\rho_1 g x_2 + C_1 \tag{iii}$$

From Eqs. (6.14.2),

$$v^{(2)} = A_2 x_2 + B_2 \text{ and } p^{(2)} = -\rho_2 g x_2 + C_2 \tag{iv}$$

Since the bottom plate is fixed

$$v^{(2)} = 0 \text{ at } x_2 = -b_2 \tag{v}$$

and we have

$$B_2 = A_2 b_2 \tag{vi}$$

Since the top plate is moving with v_o to the right, therefore $v^{(1)} = v_o$ at $x_2 = +b_1$ and we have

$$B_1 = v_o - A_1 b_1 \tag{vii}$$

At the interface $x_2 = 0$, we must have $v^{(1)} = v^{(2)}$ so that there is no slipping at the fluid interface. Therefore,

$$B_1 = B_2 \tag{viii}$$

Furthermore, from Newton's third law, we have, on $x_2 = 0$, the stress vectors on the two layers are related by

$$\mathbf{t}^{(1)}_{-\mathbf{e}_2} = -\mathbf{t}^{(2)}_{+\mathbf{e}_2} \tag{ix}$$

In terms of stress tensors, we have $\mathbf{T}^{(1)}\mathbf{e}_2 = \mathbf{T}^{(2)}\mathbf{e}_2$. That is

$$T_{12}^{(1)} = T_{12}^{(2)},\ T_{22}^{(1)} = T_{22}^{(2)},\ T_{32}^{(1)} = T_{32}^{(2)} \tag{x}$$

In other words, these stress components must be continuous across the fluid interface. Since

$$T_{12}^{(1)} = 2\mu_1 D_{12}^{(1)} = \mu_1 \frac{d\,v^{(1)}}{dx_2} = \mu_1 A_1 \tag{xi}$$

$$T_{12}^{(2)} = 2\mu_2 D_{12}^{(2)} = \mu_2 \frac{d\,v^{(2)}}{dx_2} = \mu_2 A_2 \tag{xii}$$

the condition $T_{12}^{(1)} = T_{12}^{(2)}$ gives

$$\mu_1 A_1 = \mu_2 A_2 \tag{xiii}$$

Note that this condition means that the slope of the velocity profile is not continuous at $x_2 = 0$. Also

$$T_{22}^{(1)} = -p^{(1)} + 2\mu_1 D_{22}^{(1)} = -p^{(1)} \tag{xiv}$$

and

$$T_{22}^{(2)} = -p^{(2)} \tag{xv}$$

so that $T_{22}^{(1)} = T_{22}^{(2)}$ at $x_2 = 0$ gives $C_1 = C_2 = p_o$, the pressure at the interface. Since $T_{32}^{(1)} = 0$ and $T_{32}^{(2)} = 0$, the condition $T_{32}^{(1)} = T_{32}^{(2)}$ is clearly satisfied. From Eqs. (vi,vii,viii,xiii), we obtain

$$A_1 = \frac{\mu_2 v_o}{(\mu_2 b_1 + \mu_1 b_2)} \tag{xvi}$$

$$A_2 = \frac{\mu_1}{\mu_2} A_1 = \frac{\mu_1 v_o}{(\mu_2 b_1 + \mu_1 b_2)} \tag{xvii}$$

and

$$B_2 = B_1 = \frac{\mu_1 b_2 v_o}{(\mu_2 b_1 + \mu_1 b_2)} \tag{xviii}$$

Thus, the velocity distributions are

$$v_1^{(1)} = \frac{(\mu_2 x_2 + \mu_1 b_2) v_o}{(\mu_2 b_1 + \mu_1 b_2)}, \quad v_2^{(1)} = v_3^{(1)} = 0 \tag{6.14.3a}$$

and

$$v_1^{(2)} = \frac{(\mu_1 x_2 + \mu_1 b_2) v_o}{(\mu_2 b_1 + \mu_1 b_2)}, \quad v_2^{(2)} = v_3^{(2)} = 0 \tag{6.14.3b}$$

Note that in the case of $b_2 = 0$, $v_1^{(1)} = (v_o/b_1)x_2$, which is the case of plane Couette flow of a single fluid.

6.15 Couette Flow

The laminar steady two-dimensional flow of an incompressible Newtonian fluid between two coaxial infinitely long cylinders caused by the rotation of either one or both cylinders with constant angular velocities is known as **Couette flow.**

For this flow, we look for the velocity field in the following form in cylindrical coordinates

$$v_r = 0, \; v_\theta = v(r), \; v_z = 0 \tag{i}$$

This velocity field obviously satisfies the equation of continuity [Eq. (6.8.2)] for any $v(r)$.

In the absence of body forces and taking into account the rotational symmetry of the flow (i.e., nothing depends on θ), we have, from the second Navier Stokes-equation of motion, Eq. (6. 8.1b), for the two-dimensional flow,

$$\frac{d^2 v}{dr^2} + \frac{1}{r}\frac{dv}{dr} - \frac{v}{r^2} = 0 \tag{6.15.1}$$

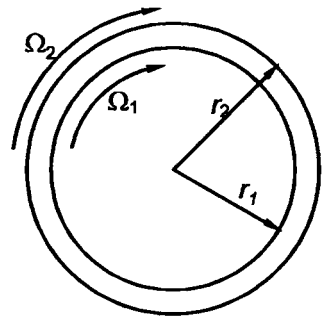

Fig. 6.10

It is easily verified that $v = r$ and $v = 1/r$ satisfy the above equation. Thus, the general solution is

$$v = Ar + \frac{B}{r} \tag{6.15.2}$$

where A and B are arbitrary constants

Let r_1 and r_2 denote the radii of the inner and outer cylinders, respectively, Ω_1 and Ω_2 their respective angular velocities. Then

$$r_1\Omega_1 = Ar_1 + \frac{B}{r_1} \tag{ii}$$

and

$$r_2\Omega_2 = Ar_2 + \frac{B}{r_2} \tag{iii}$$

from which the constants A and B can be obtained to be

$$A = \frac{\Omega_2 r_2^2 - \Omega_1 r_1^2}{r_2^2 - r_1^2}, \quad B = \frac{r_1^2 r_2^2(\Omega_1 - \Omega_2)}{r_2^2 - r_1^2} \tag{iv}$$

so that

$$v_\theta = v = \frac{1}{r_2^2 - r_1^2}\left[r\left(\Omega_2 r_2^2 - \Omega_1 r_1^2\right) - \frac{r_1^2 r_2^2}{r}(\Omega_2 - \Omega_1)\right] \tag{6.15.3}$$

and

$$v_r = v_z = 0$$

The shearing stress at the walls is equal to

$$|\tau_{r\theta}| = |2\mu D_{r\theta}| = \mu r\left|\frac{d}{dr}\left(\frac{v_\theta}{r}\right)\right|_{r=r_1,\, r_2} = \left|\frac{2B}{r^2}\right|_{r=r_1, r_2} \tag{6.15.4}$$

It can be obtained (see Prob. 6.27) that the torque per unit length which must be applied to the cylinders (equal and opposite for the two cylinders) to maintain the flow is given by

$$M = \frac{4\pi\mu r_1^2 r_2^2\,|\Omega_1 - \Omega_2|}{r_2^2 - r_1^2} \tag{6.15.5}$$

6.16 Flow Near an Oscillating Plate

Let us consider the following unsteady parallel flow near an oscillating plate:

$$v_1 = v(x_2,t),\ v_2 = 0,\ v_3 = 0 \tag{i}$$

Omitting body forces and assuming a constant pressure field, the only nontrivial Navier-Stokes equation is

$$\rho\frac{\partial v}{\partial t} = \mu\frac{\partial^2 v}{\partial x_2^2} \tag{6.16.1}$$

It can be easily verified that

$$v = ae^{-\beta x_2}\cos(\omega t-\beta x_2+\varepsilon) \tag{6.16.2a}$$

satisfies the above equation if

$$\beta = \sqrt{\rho\omega/\ 2\mu} \tag{6.16.2b}$$

From Eq. (6.16.2a), the fluid velocity at $x_2 = 0$ is

$$v = a\cos(\omega t+\varepsilon) \tag{6.16.3}$$

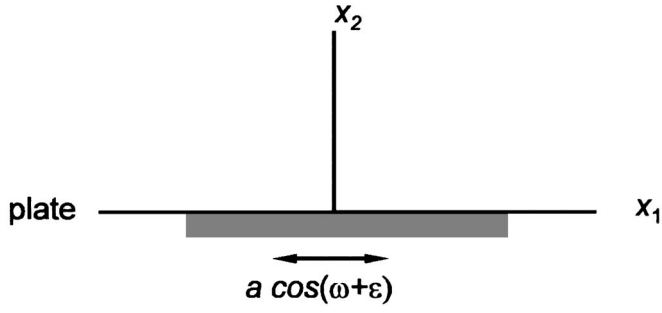

Fig. 6.11

Thus, the solution Eq. (6.16.2) represents the velocity field of an infinite extent of liquid lying in the region $x_2 \geq 0$ and bounded by a plate at $x_2 = 0$ which executes simple harmonic oscillations of amplitude a and circular frequency ω. It represents a transverse wave of wavelength $\frac{2\pi}{\beta}$, propagating inward from the boundary with a phase velocity $\frac{\omega}{\beta}$, but with rapidly diminishing amplitude (the falling off within a wavelength being in the ratio $e^{-2\pi} = 1/535$). Thus, we see that the influence of viscosity extends only to a short distance from the plate performing rapid oscillation of small amplitude a.

6.17 Dissipation Functions for Newtonian Fluids

The rate of work done P by the stress vectors and the body forces on a material particle of a continuum was derived in Chapter 4, Section 4.12 to be given by

$$P = \frac{D}{Dt}(K.E.) + P_s dV, \qquad P_s = T_{ij}\frac{\partial v_i}{\partial x_j} \tag{6.17.1}$$

where dV is the volume of the material particle. In Eq. (6.17.1), the first term in the right side is the rate of change of the kinetic energy ($K.E.$) and the second term $P_s\, dV$ is the rate of work done to change the volume and shape of the "particle" of volume dV. Per unit volume, this rate is denoted by P_s and is known as the stress working or stress power.

In this section, we shall compute the stress power for a Newtonian fluid.

(A) *Incompressible Newtonian Fluid.*

We have,

$$T_{ij} = -p\delta_{ij} + T_{ij}', \tag{i}$$

thus

$$T_{ij}\frac{\partial v_i}{\partial x_j} = -p\frac{\partial v_i}{\partial x_i} + T_{ij}'\frac{\partial v_i}{\partial x_j} \tag{6.17.2}$$

Since the fluid is incompressible, $\partial v_i/\partial x_i = 0$, therefore,

$$T_{ij}\frac{\partial v_i}{\partial x_j} = T_{ij}'\frac{\partial v_i}{\partial x_j} = 2\mu D_{ij}\frac{\partial v_i}{\partial x_j} = 2\mu D_{ij}(D_{ij}+W_{ij}) = 2\mu D_{ij}D_{ij} \tag{ii}$$

i.e.,

$$P_s = 2\mu(D_{11}^2+D_{22}^2+D_{33}^2+2D_{12}^2+2D_{13}^2+2D_{23}^2) \tag{6.17.3}$$

This is the work per unit volume per unit time done to change the shape and this part of the work accumulates with time regardless of how D_{ij} vary with time (P_s is always positive and is zero only for rigid body motions). Thus, the function

$$\Phi_{inc} = 2\mu(D_{11}^2+D_{22}^2+D_{33}^2+2D_{12}^2+2D_{13}^2+2D_{23}^2) = 2\mu D_{ij}D_{ij} \tag{6.17.4}$$

is known as the **dissipation function** for an incompressible Newtonian fluid. It represents the rate at which work is converted into heat.

(B) *Newtonian Compressible Fluid*

For this case, we have, with Δ denoting $\dfrac{\partial v_i}{\partial x_i}$

$$T_{ij}\frac{\partial v_i}{\partial x_j} = -p\Delta+\lambda\Delta^2+\Phi_{inc} \equiv -p\Delta+\Phi \tag{6.17.5}$$

where

$$\Phi = \lambda(D_{11}+D_{22}+D_{33})^2+\Phi_{inc} \tag{6.17.6a}$$

is the dissipation function for a compressible fluid.We leave it as an exercise [see Prob. 6.39] to show that the dissipation function Φ can be written

$$\Phi = (\lambda+\frac{2}{3}\mu)(D_{11}+D_{22}+D_{33})^2+\frac{2}{3}\mu[(D_{11}-D_{22})^2+(D_{11}-D_{33})^2+(D_{22}-D_{33})^2]$$
$$+4\mu(D_{12}^2+D_{13}^2+D_{23}^2) \tag{6.17.6b}$$

Example 6.17.1

For the simple shearing flow with

$$v_1 = kx_2,\ v_2 = 0,\ v_3 = 0 \tag{i}$$

Find the rate at which work is converted into heat if the liquid inside of the plates is water with $\mu = 2\times10^{-5}$ lb.s. /ft^2(0.958 mPa.s), and $k = 1\,s^{-1}$.

Solution Since the only nonzero component of the rate of deformation tensor is

$$D_{12} = \frac{k}{2} \tag{ii}$$

Thus, from Eq. (6.17.4),

$$\Phi_{inc} = 4\mu D_{12}^2 = \mu k^2 = 2\times10^{-5}\frac{\text{ft}\cdot\text{lb}}{(\text{ft})^3\,\text{s}}\ \left[\text{or, } 0.958\times10^{-3}\frac{\text{N}\cdot\text{m}}{\text{m}^3\,\text{s}}\right]$$

Thus, in one second, per cubic feet of water, the heat generated by viscosities is 2.5×10^{-8} B.T.U. [or, 0.958×10^{-3} joule per cubic meter per second].

6.18 Energy Equation For a Newtonian Fluid

In Section 4.14 of chapter 4, we derived the energy equation for a continuum to be

$$\rho\frac{Du}{Dt} = T_{ij}\frac{\partial v_i}{\partial x_j}-\frac{\partial q_i}{\partial x_i} + q_s \tag{6.18.1}$$

where u is the internal energy per unit mass, ρ is density, q_i is the component of heat flux vector, q_s is the heat supply due to external sources.

If the only heat flow taking place is that due to conduction governed by Fourier's law $\mathbf{q} = -\kappa\nabla\Theta$, where Θ is the temperature, then Eq. (6.18.1) becomes, assuming a constant coefficient of thermoconductivity κ

$$\rho\frac{Du}{Dt} = T_{ij}\frac{\partial v_i}{\partial x_j}+\kappa\frac{\partial^2\Theta}{\partial x_j\partial x_j} \tag{6.18.2}$$

For an incompressible Newtonian fluid, if it is assumed that the internal energy per unit mass is given by $c\Theta$, where c is the specific heat per unit mass, then Eq. (6.18.2) becomes

$$\rho c\frac{D\Theta}{Dt} = \Phi_{inc}+\kappa\frac{\partial^2\Theta}{\partial x_j\partial x_j} \tag{6.18.3}$$

where from Eq. (6.17.4) , $\Phi_{inc} = 2\mu(D_{11}^2+D_{22}^2+D_{33}^2+2D_{12}^2+2D_{13}^2+2D_{23}^2)$, representing the heat generated through viscous forces.

There are many situations in which the heat generated through viscous action is very small compared with that arising from the heat conduction from the boundaries, in which case, Eq. (6.18.3) simplifies to

$$\frac{D\Theta}{Dt} = \alpha\frac{\partial^2\Theta}{\partial x_j\partial x_j} \tag{6.18.4}$$

where $\alpha = \kappa/\rho c =$ thermal diffusivity.

Example 6.18.1

A fluid is at rest between two plates of infinite dimension. If the lower plate is kept at constant temperature Θ_l and the upper plate at Θ_u, find the steady-state temperature distribution. Neglect the heat generated through viscous action.

Solution. The steady-state distribution is governed by the Laplace equation

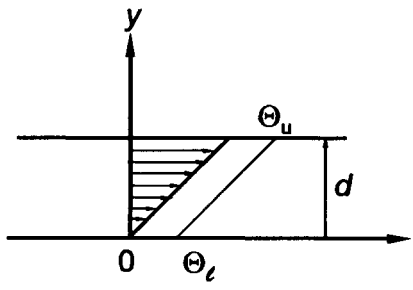

Fig. 6.12

$$\frac{\partial^2\Theta}{\partial x^2}+\frac{\partial^2\Theta}{\partial y^2}+\frac{\partial^2\Theta}{\partial z^2}=0 \tag{i}$$

which in this problem reduces to

$$\frac{d^2\Theta}{dy^2}=0 \tag{ii}$$

Thus,

$$\frac{d\Theta}{dy}=C_1$$

and

$$\Theta = C_1y+C_2 \tag{iii}$$

Using the boundary condition $\Theta = \Theta_l$ at $y = 0$ and $\Theta = \Theta_u$ at $y = d$, the constants of integration are determined to be

$$C_1 = \frac{\Theta_u-\Theta_l}{d}$$

$$C_2 = \Theta_l$$

It is noted here that when the values of Θ are prescribed on the plates, the values of $\frac{d\Theta}{dy}$ on the plates are completely determined. In fact, $\frac{d\Theta}{dy} = (\Theta_u-\Theta_l)/d$. This serves to illustrate that, in steady-state heat conduction problem (governed by the Laplace equation) it is in general not possible to prescribe both the values of Θ and the normal derivatives of Θ at the same points of the complete boundary unless they happen to be consistent with each other.

Example 6.18.2

The plane Couette flow is given by the following velocity distribution:

$$v_1 = ky,\ v_2 = 0,\ v_3 = 0 \tag{i}$$

If the temperature at the lower plate is kept at Θ_l and that at the upper plate at Θ_u, find the steady- state temperature distribution.

Solution. We seek a temperature distribution that depends only on y. From Eq. (6.18.3) , we have, since $D_{12} = k/2$

$$0 = \mu k^2+\kappa\frac{\partial^2\Theta}{dy^2} \tag{ii}$$

Thus,

$$\frac{d^2\Theta}{\partial y^2} = -\frac{\mu k^2}{\kappa} \tag{iii}$$

which gives

$$\Theta = -\frac{\mu k^2 y^2}{\kappa\ 2} + C_1 y + C_2$$

where C_1 and C_2 are constants of integration. Now at $y = 0$, $\Theta = \Theta_l$ and at $y = d$, $\Theta = \Theta_u$, therefore,

$$C_1 = \frac{\Theta_u}{d} + \frac{\mu k^2 d}{2\kappa} - \frac{\Theta_l}{d} \qquad \text{and} \qquad C_2 = \Theta_l$$

The temperature distribution is therefore given by

$$\Theta = -\frac{\mu k^2}{2\kappa} y^2 + \left(\frac{\Theta_u - \Theta_l}{d} + \frac{\mu k^2 d}{2\kappa}\right) y + \Theta_l \tag{iv}$$

6.19 Vorticity Vector

We recall from Chapter 3, Section 3.13 and 14 that the antisymmetric part of the velocity gradient $(\nabla \mathbf{v})$ is defined as the spin tensor $\mathbf{W}$. Being antisymmetric, the tensor $\mathbf{W}$ is equivalent to a vector $\boldsymbol{\omega}$ in the sense that $\mathbf{W}\mathbf{x} = \boldsymbol{\omega} \times \mathbf{x}$ (see Sect. 2B16). In fact,

$$\boldsymbol{\omega} = -(W_{23}\mathbf{e}_1 + W_{31}\mathbf{e}_2 + W_{12}\mathbf{e}_3).$$

Since (see Eq. (3.14.4),

$$\frac{D}{Dt}(d\mathbf{x}) = (\nabla \mathbf{v})d\mathbf{x} = \mathbf{D}d\mathbf{x} + \mathbf{W}d\mathbf{x} = \mathbf{D}d\mathbf{x} + \boldsymbol{\omega} \times d\mathbf{x} \tag{6.19.1}$$

the vector $\boldsymbol{\omega}$ is the angular velocity vector of that part of the motion, representing the rigid body rotation in the infinitesimal neighborhood of a material point. Further, $\boldsymbol{\omega}$ is the angular velocity vector of the principal axes of $\mathbf{D}$, which we show below:

Let $d\mathbf{x}$ be a material element in the direction of the unit vector $\mathbf{n}$ at time t., i.e.,

$$\mathbf{n} = \frac{d\mathbf{x}}{ds} \tag{6.19.2}$$

where ds is the length of $d\mathbf{x}$. Now

$$\frac{D}{Dt}\mathbf{n} = \frac{D}{Dt}\left(\frac{d\mathbf{x}}{ds}\right) = \frac{1}{ds}\left(\frac{D}{Dt}d\mathbf{x}\right) - \frac{1}{ds^2}\left[\frac{D}{Dt}(ds)\right]d\mathbf{x} \tag{i}$$

But, from Eq. (3.13.6) of Chapter 3, we have

$$\frac{1}{ds}\frac{D}{Dt}(ds) = \mathbf{n}\cdot\mathbf{D}\mathbf{n} \tag{ii}$$

Using Eq. (6.19.1) and (ii) ,Eq. (i) becomes

$$\frac{D}{Dt}\mathbf{n} = (\mathbf{D}+\mathbf{W})\mathbf{n}-(\mathbf{n}\cdot\mathbf{D}\mathbf{n})\mathbf{n} \tag{6.19.3}$$

Now, if **n** is an eigenvector of **D**, then

$$\mathbf{D}\mathbf{n} = \lambda\mathbf{n} \tag{6.19.4}$$

and

$$\mathbf{n}\cdot\mathbf{D}\mathbf{n} = \lambda \tag{6.19.5}$$

and Eq. (6.19.3) becomes

$$\frac{D}{Dt}\mathbf{n} = \mathbf{W}\mathbf{n} = \boldsymbol{\omega}\times\mathbf{n} \tag{6.19.6}$$

which is the desired result.

Eq. (6.19.6) and Eq. (6.19.1) state that the material elements which are in the principal directions of **D** rotate with angular velocity $\boldsymbol{\omega}$ while at the same time changing their lengths.

In rectangular Cartesian coordinates,

$$\boldsymbol{\omega} = \frac{1}{2}\left(\frac{\partial v_3}{\partial x_2}-\frac{\partial v_2}{\partial x_3}\right)\mathbf{e}_1+\frac{1}{2}\left(\frac{\partial v_1}{\partial x_3}-\frac{\partial v_3}{\partial x_1}\right)\mathbf{e}_2+\frac{1}{2}\left(\frac{\partial v_2}{\partial x_1}-\frac{\partial v_1}{\partial x_2}\right)\mathbf{e}_3 \tag{6.19.7}$$

Conventionally, the factor of 1/2 is dropped and one defines the so-called **vorticity vector** $\boldsymbol{\zeta}$ as

$$\boldsymbol{\zeta} = 2\boldsymbol{\omega} = \left(\frac{\partial v_3}{\partial x_2}-\frac{\partial v_2}{\partial x_3}\right)\mathbf{e}_1+\left(\frac{\partial v_1}{\partial x_3}-\frac{\partial v_3}{\partial x_1}\right)\mathbf{e}_2+\left(\frac{\partial v_2}{\partial x_1}-\frac{\partial v_1}{\partial x_2}\right)\mathbf{e}_3 \tag{6.19.8}$$

The tensor $2\mathbf{W}$ is known as the **vorticity tensor**.

It can be easily seen that in indicial notation, the Cartesian components of $\boldsymbol{\zeta}$ are

$$\zeta_i = \varepsilon_{ijk}\frac{\partial v_k}{\partial x_j}, \quad \text{or equivalently } \frac{\partial v_i}{\partial x_j}-\frac{\partial v_j}{\partial x_i} = -\varepsilon_{kij}\,\zeta_k \tag{6.19.9}$$

and in invariant notation,

$$\boldsymbol{\zeta} = \text{curl } \mathbf{v} \tag{6.19.10}$$

In cylindrical coordinates (r,θ,z)

$$\boldsymbol{\zeta} = \left(\frac{1}{r}\frac{\partial v_z}{\partial\theta}-\frac{\partial v_\theta}{\partial z}\right)\mathbf{e}_r+\left(\frac{\partial v_r}{\partial z}-\frac{\partial v_z}{\partial r}\right)\mathbf{e}_\theta+\left(\frac{\partial v_\theta}{\partial r}+\frac{v_\theta}{r}-\frac{1}{r}\frac{\partial v_r}{\partial\theta}\right)\mathbf{e}_z \tag{6.19.11}$$

In spherical coordinates (r,θ,φ)

$$\boldsymbol{\zeta} = \left(\frac{1}{r}\frac{\partial v_\varphi}{\partial \theta} + \frac{v_\varphi \cot\theta}{r} - \frac{1}{r\sin\theta}\frac{\partial v_\theta}{\partial \varphi}\right)\mathbf{e}_r + \left(\frac{1}{r\sin\theta}\frac{\partial v_r}{\partial \varphi} - \frac{v_\varphi}{r} - \frac{\partial v_\varphi}{\partial r}\right)\mathbf{e}_\theta + \left(\frac{\partial v_\theta}{\partial r} + \frac{v_\theta}{r} - \frac{1}{r}\frac{\partial v_r}{\partial \theta}\right)\mathbf{e}_\varphi \quad (6.19.12)$$

Example 6.19.1

Find the vorticity vector for the simple shearing flow:

$$v_1 = kx_2, \; v_2 = v_3 = 0 \quad \text{(i)}$$

Solution. We have

$$\zeta_1 = \frac{\partial v_3}{\partial x_2} - \frac{\partial v_2}{\partial x_3} = 0, \quad \zeta_2 = \frac{\partial v_1}{\partial x_3} - \frac{\partial v_3}{\partial x_1} = 0$$

and

$$\zeta_3 = \frac{\partial v_2}{\partial x_1} - \frac{\partial v_1}{\partial x_2} = -k$$

That is,

$$\boldsymbol{\zeta} = -k\mathbf{e}_3 \quad \text{(ii)}$$

We see that the angular velocity vector ($= \boldsymbol{\zeta} / 2$) is normal to the $x_1 x_2$ plane and the minus sign simply means that the spinning is clockwise looking from the positive side of x_3.

Example 6.19.2

Find the distribution of the vorticity vector in the Couette flow discussed in Section 6.15.

Solution. With $v_r = v_z = 0$ and $v_\theta = Ar + (B/r)$. It is obvious that the only nonzero vorticity component is in the z direction.

From Eq. (6.19.11),

$$\zeta_z = \frac{dv_\theta}{dr} + \frac{v_\theta}{r} = \frac{1}{r}\frac{d}{dr}(rv_\theta) \quad \text{(iv)}$$

Now,

$$\frac{d}{dr}(rv_\theta) = \frac{d}{dr}(Ar^2 + B) = 2Ar \quad \text{(v)}$$

Thus,

$$\zeta_z = 2A = 2\frac{(\Omega_2 r_2^2 - \Omega_1 r_1^2)}{r_2^2 - r_1^2} \tag{vi}$$

6.20 Irrotational Flow

If the vorticity vector (or equivalently, vorticity tensor) corresponding to a velocity field, is zero in some region and for some time interval, the flow is called irrotational in that region and in that time interval.

Let $\varphi(x_1, x_2, x_3, t)$ be a scalar function and let the velocity components be derived from φ by the following equation:

$$v_1 = -\frac{\partial\varphi}{\partial x_1} \quad v_2 = -\frac{\partial\varphi}{\partial x_2} \quad v_3 = -\frac{\partial\varphi}{\partial x_3} \tag{6.20.1}$$

i.e.,

$$v_i = -\frac{\partial\varphi}{\partial x_i} \tag{6.20.2}$$

Then the vorticity component

$$\zeta_1 = \frac{\partial v_3}{\partial x_2} - \frac{\partial v_2}{\partial x_3} = -\frac{\partial^2\varphi}{\partial x_3 \partial x_2} + \frac{\partial^2\varphi}{\partial x_2 \partial x_3} = 0$$

and similarly

$$\zeta_2 = \zeta_3 = 0$$

That is, a scalar function $\varphi(x_1, x_2, x_3, t)$ defines an irrotational flow field through the Eq. (6.20.2). Obviously, not all arbitrary functions φ will give rise to velocity fields that are physically possible. For one thing, the equation of continuity, expressing the principle of conservation of mass, must be satisfied. For an incompressible fluid, the equation of continuity reads

$$\frac{\partial v_i}{\partial x_i} = 0 \tag{6.20.3}$$

Thus, combining Eq. (6.20.2) with Eq. (6.20.3), we obtain the Laplacian equation for φ,

$$\frac{\partial^2\varphi}{\partial x_j \partial x_j} = 0 \tag{6.20.4a}$$

i.e.,

$$\nabla^2\varphi \equiv \frac{\partial^2\varphi}{\partial x_1^2} + \frac{\partial^2\varphi}{\partial x_2^2} + \frac{\partial^2\varphi}{\partial x_3^2} = 0 \tag{6.20.4b}$$

In the next two sections, we shall discuss the conditions under which irrotational flows are dynamically possible for an inviscid and viscous fluid.

6.21 Irrotational Flow of an Inviscid Incompressible Fluid of Homogeneous Density

An inviscid fluid is defined by

$$T_{ij} = -p\delta_{ij} \tag{6.21.1}$$

obtained by setting the viscosity $\mu = 0$ in the constitutive equation for Newtonian viscous fluid.

The equations of motion for an inviscid fluid are

$$\rho\left(\frac{\partial v_i}{\partial t}+v_j\frac{\partial v_i}{\partial x_j}\right) = -\frac{\partial p}{\partial x_i}+\rho B_i \tag{6.21.2a}$$

or

$$\rho\frac{D\mathbf{v}}{Dt} = -\nabla p+\rho\mathbf{B} \tag{6.21.2b}$$

Equations (6.21.2) are known as the **Euler's equation of motion.** We now show that irrotational flows are always dynamically possible for an inviscid, incompressible fluid with homogeneous density provided that the body forces acting are derivable from a potential Ω by the formulas:

$$B_i = -\frac{\partial\Omega}{\partial x_i} \tag{6.21.3}$$

For example , in the case of gravity force, with x_3 axis pointing vertically upward,

$$\Omega = gx_3 \tag{6.21.4}$$

so that

$$B_1 = 0,\ B_2 = 0,\ B_3 = -g \tag{6.21.5}$$

Using Eq. (6.21.3), and noting that ρ = constant for a homogeneous fluid. Eq. (6.21.2) can be written as

$$\frac{\partial v_i}{\partial t}+v_j\frac{\partial v_i}{\partial x_j} = -\frac{\partial}{\partial x_i}\left(\frac{p}{\rho}+\Omega\right) \tag{6.21.6}$$

For an irrotational flow

$$\frac{\partial v_i}{\partial x_j} = \frac{\partial v_j}{\partial x_i} \tag{i}$$

so that

$$v_j\frac{\partial v_i}{\partial x_j} = v_j\frac{\partial v_j}{\partial x_i} = \frac{1}{2}\frac{\partial}{\partial x_i}v_jv_j = \frac{1}{2}\frac{\partial}{\partial x_i}v^2 \tag{ii}$$

where $v^2 = v_1^2+v_2^2+v_3^3$ is the square of the speed. Therefore Eq. (6.21.6) becomes

$$\frac{\partial}{\partial x_i}\left(-\frac{\partial\varphi}{\partial t}+\frac{v^2}{2}+\frac{p}{\rho}+\Omega\right) = 0 \tag{6.21.7}$$

Thus

$$-\frac{\partial\varphi}{\partial t}+\frac{v^2}{2}+\frac{p}{\rho}+\Omega = f(t) \tag{6.21.8}$$

where $f(t)$ is an arbitrary function of t.

If the flow is also steady then we have

$$\frac{v^2}{2}+\frac{p}{\rho}+\Omega = \text{constant}. \tag{6.21.9}$$

Equation (6.21.8) and the special case (6.21.9) are known as the **Bernoulli's equations**. In addition to being a very useful formula in problems where the effect of viscosity can be neglected, the above derivation of the formula shows that irrotational flows are always dynamically possible under the conditions stated earlier. For whatever function φ, so long as $v_i = -\frac{\partial\varphi}{\partial x_i}$ and $\nabla^2\varphi = 0$, the dynamic equations of motion can always be integrated to give Bernoulli's equation from which the pressure distribution is obtained, corresponding to which the equations of motion are satisfied.

Example 6.21.1

Given $\varphi = x^3-3xy^2$.

(a) Show that φ satisfies the Laplace equation.

(b) Find the irrotational velocity field.

(c) Find the pressure distribution for an incompressible homogeneous fluid, if at (0,0.0) $p = p_o$ and $\Omega = gz$.

(d) If the plane $y = 0$ is a solid boundary, find the tangential component of velocity on the plane.

Solution. (a) We have

$$\frac{\partial^2\varphi}{\partial x^2} = 6x,\ \frac{\partial^2\varphi}{\partial y^2} = -6x,\ ,\frac{\partial^2\varphi}{\partial z^2} = 0 \tag{i}$$

therefore,

$$\frac{\partial^2\varphi}{\partial x^2}+\frac{\partial^2\varphi}{\partial y^2}+\frac{\partial^2\varphi}{\partial z^2} = 6x-6x = 0 \tag{ii}$$

(b) From $v_i = -\dfrac{\partial\varphi}{\partial x_i}$, we have

$$v_1 = -\frac{\partial\varphi}{\partial x} = -3x^2+3y^2, \quad v_2 = -\frac{\partial\varphi}{\partial y} = 6xy, \quad v_3 = 0 \tag{iii}$$

(c) We have, at (0,0,0), $v_1 = 0$, $v_2 = 0$, $v_3 = 0$, $p = p_o$, and $\Omega = 0$

therefore, from the Bernoulli's equation, [Eq. (6.21.9)]

$$\frac{1}{2}v^2+\frac{p}{\rho}+\Omega = C \tag{iv}$$

we have

$$C = \frac{p_o}{\rho} \tag{v}$$

and

$$p = p_o-\frac{\rho}{2}(v_1^2+v_2^2)-\rho gz \tag{vi}$$

or

$$p = p_o-\frac{\rho}{2}[9(y^2-x^2)^2+36x^2y^2]-\rho gz \tag{vii}$$

(d) On the plane $y = 0$, $v_1 = -3x^2$ and $v_2 = 0$. Now, $v_2 = 0$ means that the normal components of velocity are zero on the plane, which is what it should be if $y = 0$ is a solid fixed boundary. Since $v_1 = -3x^2$, the tangential components of velocity are not zero on the plane, that is, the fluid slips on the boundary. In inviscid theory, consistent with the assumption of zero viscosity, the slipping of fluid on a solid boundary is allowed. More discussion on this point will be given in the next section.

Example 6.21.2

A liquid is being drained through a small opening as shown. Neglect viscosity and assume that the falling of the free surface is so slow that the flow can be treated as a steady one. Find the exit speed of the liquid jet as a function of h.

Solution. For a point on the free surface such as the point A, $p = p_o$, $v \approx 0$ and $z = h$. Therefore, from Eq. (6.21.9)

$$\frac{1}{2}v^2 + \frac{p}{\rho} + gz = \frac{p_o}{\rho} + gh \tag{i}$$

At a point on the exit jet, such as the point B, $z = 0$ and $p = p_o$. Thus,

$$\frac{1}{2}v^2 + \frac{p_o}{\rho} = \frac{p_o}{\rho} + gh \tag{ii}$$

from which

$$v = \sqrt{2gh} \tag{iii}$$

This is the well known *Torricelli's* formula.

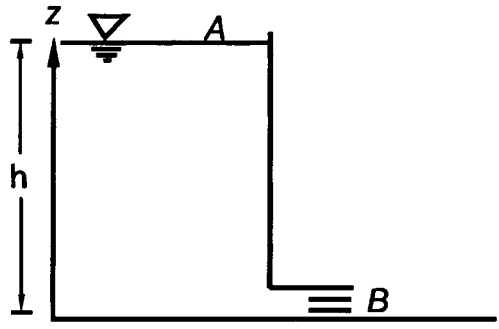

Fig. 6.13

6.22 Irrotational Flows as Solutions of Navier-Stokes Equation

For an incompressible Newtonian fluid, the equations of motion are the Navier-Stokes equations:

$$\frac{\partial v_i}{\partial t} + v_j \frac{\partial v_i}{\partial x_j} = -\frac{1}{\rho}\frac{\partial p}{\partial x_i} + \frac{\mu}{\rho}\frac{\partial^2 v_i}{\partial x_j \partial x_j} + B_i \tag{6.22.1}$$

For irrotational flows

$$v_i = -\frac{\partial \varphi}{\partial x_i} \tag{6.22.2}$$

so that

$$\frac{\partial^2 v_i}{\partial x_j \partial x_j} = -\frac{\partial^2}{\partial x_j \partial x_j}\left(\frac{\partial \varphi}{\partial x_i}\right) = -\frac{\partial}{\partial x_i}\frac{\partial^2 \varphi}{\partial x_j \partial x_j}$$

But, from Eq. (6.20.4) $\frac{\partial^2 \varphi}{\partial x_j \partial x_j} = 0$. Therefore, the terms involving viscosity in the Navier-Stokes equation drop out in the case of irrotational flows so that the equations take the same form as the Euler's equation for an inviscid fluid. Thus, if the *viscous* fluid has homogeneous density and if the body forces are conservative (i.e., $B_i = -\frac{\partial \Omega}{\partial x_i}$), the results of the last sections show that irrotational flows are dynamically possible also for a viscous fluid. However, in any physical problems, there are always solid boundaries. A viscous fluid adheres to the boundary so that both the tangential and the normal components of the fluid velocity at the boundary should be those of the boundary. This means that both velocity components at the boundary are to be prescribed. For example, if $y = 0$ is a solid boundary at rest, then on the boundary, the tangential components, $v_x = v_z = 0$, and the normal components $v_y = 0$. For irrotational flow, the conditions to be prescribed for φ on the boundary are φ = constant at $y = 0$ (so that $v_x = v_z = 0$) and $\frac{\partial \varphi}{\partial y} = 0$ at $y = 0$. But it is known (e.g., see Example 6.18.1, or from the potential theory) that in general there does not exist solution of the Laplace equation satisfying both the conditions φ = constant and $\nabla\varphi \cdot \mathbf{n} = \frac{\partial \varphi}{\partial n} = 0$ on the complete boundaries. Therefore, unless the motion of solid boundaries happens to be consistent with the requirements of irrotationality, vorticity will be generated on the boundary and diffuse into the flow field according to vorticity equations to be derived in the next section. However, in certain problems under suitable conditions, the vorticity generated by the solid boundaries is confined to a thin layer of fluid in the vicinity of the boundary so that outside of the layer the flow is irrotational if it originated from a state of irrotationality. We shall have more to say about this in the next two sections.

Example 6.22.1

For the Couette flow between two coaxial infinitely long cylinders, how should the ratio of the angular velocities of the two cylinders be, so that the *viscous* fluid will be having irrotational flow?

Solution. From Example 19.2 of Section 6.19, the only nonzero vorticity component in the Couette flow is

$$\zeta_z = 2\frac{\Omega_2 r_2^2 - \Omega_1 r_1^2}{r_2^2 - r_1^2} \tag{i}$$

where Ω_i denotes the angular velocities.If $\Omega_2 r_2^2 - \Omega_1 r_1^2 = 0$, the flow is irrotational. Thus,

$$\frac{\Omega_2}{\Omega_1} = \frac{r_1^2}{r_2^2} \tag{ii}$$

It should be noted that even though the viscous terms drop out from the Navier-Stokes equations in the case of irrotational flows, it does not mean that there is no viscous dissipation in an irrotational flow of a viscous fluid. In fact, so long as there is one nonzero rate of deformation component, there is viscous dissipation [given by Eq. (6.17.4)] and the rate of work done to maintain the irrotational flow exactly compensates the viscous dissipations.

6.23 Vorticity Transport Equation for Incompressible Viscous Fluid with a Constant Density

In this section, we derive the equation governing the vorticity vector for an incompressible homogeneous viscous fluid. First, we assume that the body force is derivable from a potential Ω, i.e., $B_i = -\frac{\partial \Omega}{\partial x_i}$. Now, with ρ = constant and $B_i = -\frac{\partial \Omega}{\partial x_i}$, the Navier-Stokes equation can be written

$$\frac{\partial v_i}{\partial t} + v_j \frac{\partial v_i}{\partial x_j} = -\frac{\partial}{\partial x_i}\left(\frac{p}{\rho} + \Omega\right) + \nu \frac{\partial^2 v_i}{\partial x_j \partial x_j} \tag{6.23.1}$$

where $\nu = \mu/\rho$ is called the **kinematic viscosity.** If we operate on Eq. (6.23.1) by the differential operator $\varepsilon_{mni}\frac{\partial}{\partial x_n}$ [i.e, taking the curl of both sides of Eq. (6.23.1)]. We have, since

$$\varepsilon_{mni}\frac{\partial}{\partial x_n}\left(\frac{\partial v_i}{\partial t}\right) = \frac{\partial}{\partial t}\left(\varepsilon_{mni}\frac{\partial v_i}{\partial x_n}\right) = \frac{\partial \zeta_m}{\partial t} \tag{i}$$

$$\begin{aligned}\varepsilon_{mni}\frac{\partial}{\partial x_n}\left(v_j \frac{\partial v_i}{\partial x_j}\right) &= \varepsilon_{mni}\frac{\partial v_j}{\partial x_n}\frac{\partial v_i}{\partial x_j} + v_j \frac{\partial}{\partial x_j}\left(\varepsilon_{mni}\frac{\partial v_i}{\partial x_n}\right) \\ &= \varepsilon_{mni}\frac{\partial v_j}{\partial x_n}\frac{\partial v_i}{\partial x_j} + v_j \frac{\partial \zeta_m}{\partial x_j}\end{aligned} \tag{ii}.$$

$$\varepsilon_{mni}\frac{\partial^2}{\partial x_n \partial x_i}\left(\frac{p}{\rho} + \Omega\right) = 0 \text{ [i.e., curl}\nabla\left(\frac{p}{\rho} + \Omega\right) = 0] \tag{6.23.2}$$

and

$$\varepsilon_{mni}\frac{\partial}{\partial x_n}\left(\frac{\partial^2 v_i}{\partial x_j \partial x_j}\right) = \frac{\partial^2}{\partial x_j \partial x_j}\left(\varepsilon_{mni}\frac{\partial v_i}{\partial x_n}\right) = \frac{\partial^2 \zeta_m}{\partial x_j \partial x_j} \tag{iii}$$

The Navier-Stokers equation therefore, takes the form

$$\frac{\partial \zeta_m}{\partial t}+v_j\frac{\partial \zeta_m}{\partial x_j}+\varepsilon_{mni}\frac{\partial v_j}{\partial x_n}\frac{\partial v_i}{\partial x_j}=\nu\frac{\partial^2 \zeta_m}{\partial x_j \partial x_j} \qquad (6.23.3).$$

We now show that the third term on the left-hand side is equal to $-\frac{\partial v_m}{\partial x_n}\zeta_n$.

From Eq. (6.19.9), we have

$$\frac{\partial v_i}{\partial x_j}=\frac{\partial v_j}{\partial x_i}+\varepsilon_{pji}\,\zeta_p \qquad \text{(iv)}$$

Thus,

$$\varepsilon_{mni}\frac{\partial v_j}{\partial x_n}\frac{\partial v_i}{\partial x_j}=\varepsilon_{mni}\frac{\partial v_j}{\partial x_n}\frac{\partial v_j}{\partial x_i}+\varepsilon_{mni}\varepsilon_{pji}\frac{\partial v_j}{\partial x_n}\zeta_p \qquad \text{(v)}$$

But it can be easily verified that for any A_{ij}, $\varepsilon_{mni}A_{jn}A_{ji}=0$, thus

$$\varepsilon_{mni}\frac{\partial v_j}{\partial x_n}\frac{\partial v_j}{\partial x_i}=0 \qquad \text{(vi).}$$

and since $\varepsilon_{mn\,i}\,\varepsilon_{p\,ji}=(\delta_{mp}\delta_{nj}-\delta_{mj}\delta_{np})$[see Prob. 2A7]

$$\varepsilon_{mn\,i}\,\varepsilon_{p\,ji}\frac{\partial v_j}{\partial x_n}\zeta_p=(\delta_{mp}\delta_{nj}-\delta_{mj}\delta_{np})\frac{\partial v_j}{\partial x_n}\zeta_p$$

$$=\frac{\partial v_n}{\partial x_n}\zeta_m-\frac{\partial v_m}{\partial x_n}\zeta_n=-\frac{\partial v_m}{\partial x_n}\zeta_n \qquad \text{(vii)}$$

where we have used the equation of continuity $\frac{\partial v_n}{\partial x_n}=0$. Therefore, we have

$$\frac{\partial \zeta_m}{\partial t}+v_j\frac{\partial \zeta_m}{\partial x_j}=\frac{\partial v_m}{\partial x_n}\zeta_n+\nu\frac{\partial^2 \zeta_m}{\partial x_j \partial x_j} \qquad (6.23.4a)$$

or,

$$\frac{D\zeta_m}{Dt}=\frac{\partial v_m}{\partial x_n}\zeta_n+\nu\frac{\partial^2 \zeta_m}{\partial x_j \partial x_j} \qquad (6.23.4b)$$

which can be written in the following invariant form:

$$\frac{D\boldsymbol{\zeta}}{Dt}=(\nabla\mathbf{v})\boldsymbol{\zeta}+\nu\nabla^2\boldsymbol{\zeta} \qquad (6.23.5)$$

where

$$\nabla^2 = \frac{\partial^2}{\partial x_j \partial x_j}$$

Example 6.23.1

Reduce, from Eq. (6.23.5) the vorticity transport equation for the case of two-dimensional flow.

Solutions. Let the velocity field be:

$$v_1 = v_1(x_1,x_2,t),\ v_2 = v_2(x_1,x_2,t),\ v_3 = 0 \tag{i}$$

Then

$$\boldsymbol{\zeta} = \left(\frac{\partial v_3}{\partial x_2} - \frac{\partial v_2}{\partial x_3}\right)\mathbf{e}_1 + \left(\frac{\partial v_1}{\partial x_3} - \frac{\partial v_3}{\partial x_1}\right)\mathbf{e}_2 + \left(\frac{\partial v_2}{\partial x_1} - \frac{\partial v_1}{\partial x_2}\right)\mathbf{e}_3 \tag{ii}$$

becomes

$$\boldsymbol{\zeta} = \left(\frac{\partial v_2}{\partial x_1} - \frac{\partial v_1}{\partial x_2}\right)\mathbf{e}_3 = \zeta_3 \mathbf{e}_3 \tag{iii}$$

That is, the angular velocity vector($\boldsymbol{\zeta}$ / 2) is perpendicular to the plane of flow as expected.

Now,

$$[(\nabla \mathbf{v})\boldsymbol{\zeta}] = \begin{bmatrix} \frac{\partial v_1}{\partial x_1} & \frac{\partial v_1}{\partial x_2} & 0 \\ \frac{\partial v_2}{\partial x_1} & \frac{\partial v_2}{\partial x_2} & 0 \\ 0 & 0 & 0 \end{bmatrix} \begin{bmatrix} 0 \\ 0 \\ \zeta_3 \end{bmatrix} = \begin{bmatrix} 0 \\ 0 \\ 0 \end{bmatrix} \tag{iv}$$

Thus, Eq. (6.23.5) reduces to the scalar equation

$$\frac{D\zeta_3}{Dt} = \nu \nabla^2 \zeta_3 \tag{6.23.6}$$

where

$$\frac{D}{Dt} = \frac{\partial}{\partial t} + v_1 \frac{\partial}{\partial x_1} + v_2 \frac{\partial}{\partial x_2} \quad \text{and} \quad \nabla^2 = \frac{\partial^2}{\partial x_1^2} + \frac{\partial^2}{\partial x_2^2}$$

Example 6.23.2

The velocity field for the plane Poiseuille flow is given by

$$v_1 = C\left(\frac{h^2}{4} - x_2^2\right), \; v_2 = 0. \; v_3 = 0$$

(a) Find the vorticity components.

(b) Verify that Eq. (6.23.6) is satisfied.

Solution. The only nonzero vorticity component is

$$\zeta_3 = \frac{\partial v_2}{\partial x_1} - \frac{\partial v_1}{\partial x_2} = 2Cx_2 \tag{i}$$

(b) We have, letting $\zeta_3 = \zeta$

$$\frac{D\zeta}{Dt} = \frac{\partial \zeta}{\partial t} + v_1 \frac{\partial \zeta}{\partial x_1} + v_2 \frac{\partial \zeta}{\partial x_2} = 0 + (v_1)(0) + 0 = 0 \tag{ii}$$

and

$$\nabla^2 \zeta = \left(\frac{\partial^2}{\partial x_1^2} + \frac{\partial^2}{\partial x_2^2}\right)(2Cx_2) = 0 \tag{iv}$$

so that Eq. (6.23.6) is satisfied.

6.24 Concept of a Boundary Layer

In this section we shall describe, qualitatively, the concept of viscous boundary layer by means of an analogy. In Example 6.23.1, we derived the vorticity equation for two-dimensional flow of an incompressible viscous fluid to be the following:

$$\frac{D\zeta}{Dt} = \nu \nabla^2 \zeta \tag{6.24.1}$$

where ζ is the only nonzero vorticity component for the two-dimensional flow and ν is kinematic viscosity ($\nu = \mu/\rho$).

In Section 6.18 we saw that, if the heat generated through viscous dissipation is neglected, the equation governing the temperature distribution in the flow field due to heat conduction through the boundaries of a hot body is given by [Eq. (6.18.4)]

$$\frac{D\Theta}{Dt} = \alpha \nabla^2 \Theta \tag{6.24.2}$$

where Θ is temperature and α, the thermal diffusivity, is related to conductivity κ, density ρ and specific heat per unit mass c by the formulas $\alpha = \kappa/\rho c$.

Suppose now we have the problem of a uniform stream flowing past a hot body whose temperature in general varies along the boundary. Let the temperature at large distance from the body be Θ_∞, then defining $\Theta' = \Theta - \Theta_\infty$, we have

$$\frac{D\Theta'}{Dt} = \alpha \nabla^2 \Theta' \tag{6.24.3}$$

with $\Theta' = 0$ at $x^2+y^2 \to \infty$. On the other hand, the distribution of vorticity around the body is governed by

$$\frac{D\zeta}{Dt} = \nu \nabla^2 \zeta \tag{6.24.4}$$

with $\zeta = 0$ at $x^2+y^2 \to \infty$, where the variation of ζ, being due to vorticity generated on the solid boundary and diffusing into the field, is much the same as the variation of temperature, being due to heat diffusing from the hot body into the field.

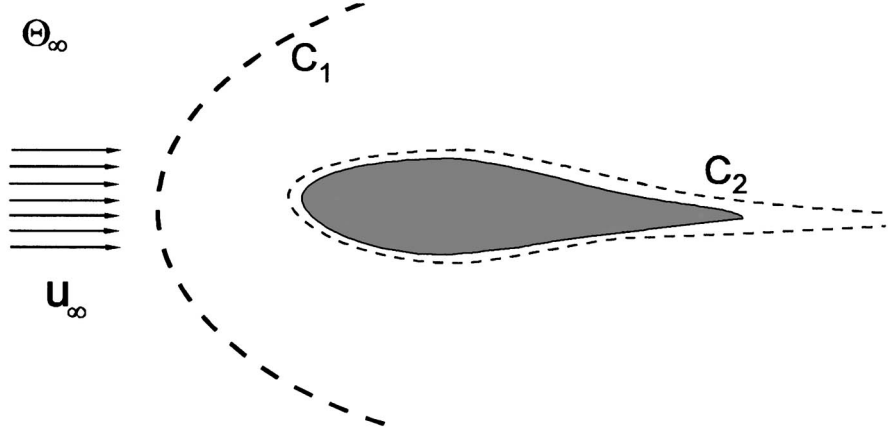

Fig. 6.14

Now, it is intuitively clear that in the case of the temperature distribution, the influence of the hot temperature of the body in the field depends on the speed of the stream. At very low speed, conduction dominates over the convection of heat so that its influence will extend deep into the fluid in all directions as shown by the curve C_1 in Fig. 6.14, whereas at high speed, the heat is convected away by the fluid so rapidly that the region affected by the hot body will be confined to a thin layer in the immediate neighborhood of the body and a tail of heated fluid behind it, as is shown by the curve C_2 in Fig. 6.14.

Analogously, the influence of viscosity, which is responsible for the generation of vorticity on the boundary, depends on the speed U_∞ far upstream. At low speed, the influence will be deep into the field in all directions so that essentially the whole flow field is having vorticity. On the other hand, at high speed, the effect of viscosity is confined in a thin layer (known as a **boundary layer**) near the body and behind it. Outside of the layer, the flow is essentially irrotational. This concept enables one to solve a fluid flow problem by dividing the flow region into an irrotational external flow region and a viscous boundary layer. Such a method simplifies considerably the complexity of the mathematical problem involving the full Navier-Stokes equations. We shall not go into the methods of solution and of the matching of the regions as they belong to the boundary layer theory.

6.25 Compressible Newtonian Fluid

For a compressible fluid, to be consistent with the state of stress corresponding to the state of rest and also to be consistent with the definition that p is not to depend explicitly on any kinematic quantities when in motion, we shall regard p as having the same value as the thermodynamic equilibrium pressure. Therefore, for a particular density ρ and temperature Θ, the pressure is determined by the equilibrium equation of state

$$p = p(\rho,\Theta) \tag{6.25.1}$$

For example, for an ideal gas $p = R\rho\Theta$. Thus

$$T_{ij} = -p(\rho,\Theta)\delta_{ij}+\lambda\Delta\delta_{ij}+2\mu D_{ij} \tag{6.25.2}$$

Since

$$\frac{T_{ii}}{3} = -p+(\lambda+\frac{2}{3}\mu)\Delta \tag{6.25.3}$$

it is clear that the " pressure" p in this case does not have the meaning of mean normal compressive stress. It does have the meaning if

$$k = \lambda+\frac{2}{3}\mu = 0 \tag{6.25.4}$$

which is known to be true for monatomic gases.

Written in terms of μ and $k = \lambda+\frac{2}{3}\mu$, the constitutive equation reads

$$T_{ij} = -p\delta_{ij}-\frac{2}{3}\mu\Delta\delta_{ij}+2\mu D_{ij}+k\Delta\delta_{ij} \tag{6.25.5}$$

With T_{ij} given by the above equation, the equations of motion become (assuming constant μ and k)

$$\rho\frac{Dv_i}{Dt} = \rho B_i-\frac{\partial p}{\partial x_i}+\frac{\mu}{3}\frac{\partial}{\partial x_i}\left(\frac{\partial v_j}{\partial x_j}\right)+\mu\frac{\partial^2 v_i}{\partial x_j\partial x_j}+k\frac{\partial}{\partial x_i}\left(\frac{\partial v_j}{\partial x_j}\right) \tag{6.25.6}$$

Equations (6.25.1) and (6.25.6) are four equations for six unknowns $v_1, v_2, v_3, p, \rho, \Theta$; the fifth equation is given by the equation of continuity

$$\frac{D\rho}{Dt}+\rho\frac{\partial v_j}{\partial x_j} = 0 \tag{6.25.7}$$

and the sixth equation is supplied by the energy equation

$$\rho\frac{Du}{Dt} = T_{ij}\frac{\partial v_i}{\partial x_j}+\kappa\frac{\partial^2\Theta}{\partial x_j\partial x_j}. \tag{6.25.8}$$

where T_{ij} is given by Eq. (6.25.5) and the dependence of the internal energy u on ρ and Θ is assumed to be the same as when the fluid is in the equilibrium state, for example, for ideal gas

$$u = c_v\Theta \tag{6.25.9}$$

where c_v is the specific heat at constant volume.

In general, we have

$$u = u(\rho,\Theta) \tag{6.25.10}$$

Equations (6.25.1),(6.25.6),(6.25.7),(6.25.8), and (6.25.10) form a system of seven scalar equations for the seven unknowns $v_1, v_2, v_3, p, \rho, \Theta$, and u.

6.26 Energy Equation in Terms of Enthalpy

Enthalpy per unit mass is defined as

$$h = u+\frac{p}{\rho} \tag{6.26.1}$$

where u is the internal energy per unit mass, p the pressure, ρ the density.

Let $h_o = h+v^2/2$, (h_o is known as the **stagnation enthalpy**). We shall show that in terms of h_o, the energy equation becomes (neglecting body forces)

$$\rho\frac{Dh_o}{Dt} = \frac{\partial p}{\partial t}+\frac{\partial}{\partial x_j}(T_{ij}'v_i-q_j) \tag{6.26.2}$$

where T_{ij}' is the viscous stress tensor, q_i the heat flux vector. First, by definition,

$$\frac{Dh_o}{Dt} = \frac{D}{Dt}\left(u+\frac{p}{\rho}+\frac{v_jv_j}{2}\right) = \frac{Du}{Dt}+\frac{D}{Dt}\left(\frac{p}{\rho}\right)+v_j\frac{Dv_j}{Dt} \tag{6.26.3}$$

From the energy equation [Eq. (6.18.1)], with $q_s = 0$, we have

$$\rho\frac{Du}{Dt} = T_{ij}\frac{\partial v_i}{\partial x_j} - \frac{\partial q_i}{\partial x_i} = (-p\delta_{ij} + T_{ij}')\frac{\partial v_i}{\partial x_j} - \frac{\partial q_i}{\partial x_i} = -p\frac{\partial v_i}{\partial x_i} + T_{ij}'\frac{\partial v_i}{\partial x_j} - \frac{\partial q_i}{\partial x_i} \tag{6.26.4}$$

Also, we have

$$\frac{D}{Dt}\left(\frac{p}{\rho}\right) = \frac{1}{\rho}\frac{Dp}{Dt} - \frac{p}{\rho^2}\frac{D\rho}{Dt} \tag{ii}$$

and the equation of motion (in the absence of body forces)

$$\rho\frac{Dv_i}{Dt} = \frac{\partial T_{ij}}{\partial x_j} = -\frac{\partial p}{\partial x_i} + \frac{\partial T_{ij}'}{\partial x_j} \tag{6.26.5}$$

Thus,

$$\rho\frac{Dh_o}{Dt} = -p\frac{\partial v_i}{\partial x_i} + T_{ij}'\frac{\partial v_i}{\partial x_j} - \frac{\partial q_i}{\partial x_i} + \frac{Dp}{Dt} - \frac{p}{\rho}\frac{D\rho}{Dt} - v_i\frac{\partial p}{\partial x_i} + \frac{\partial T_{ij}'}{\partial x_j}v_i \tag{6.26.6}$$

Noting that

$$\frac{Dp}{Dt} - v_i\frac{\partial p}{\partial x_i} = \frac{\partial p}{\partial t} \tag{iii}$$

and

$$-p\frac{\partial v_i}{\partial x_i} - \frac{p}{\rho}\frac{D\rho}{Dt} = -\frac{p}{\rho}\left(\frac{D\rho}{Dt} + \rho\frac{\partial v_i}{\partial x_i}\right) = 0 \tag{iv}$$

we have,

$$\rho\frac{Dh_o}{Dt} = T_{ij}'\frac{\partial v_i}{\partial x_j} + \frac{\partial T_{ij}'}{\partial x_j}v_i - \frac{\partial q_i}{\partial x_i} + \frac{\partial p}{\partial t} \tag{6.26.7}$$

or,

$$\rho\frac{Dh_o}{Dt} = \frac{\partial}{\partial x_j}(T_{ij}'v_i) - \frac{\partial q_i}{\partial x_i} + \frac{\partial p}{\partial t}$$

which is Equation (6.26.2).

Example 6.26.1

Show that for steady flow of an inviscid non-heat conducting fluid, if the flow originates from a homogeneous state, then

(a) $h + (v^2/2) =$ constant, and

(b) if the fluid is an ideal gas then

$$\frac{\gamma}{\gamma-1}\frac{p}{\rho}+\frac{v^2}{2} = \text{constant.} \tag{6.26.8}$$

where $\gamma = c_p/c_v$, the ratio of specific heat under constant pressure and constant volume.

Solution. (a) Since the flow is steady, therefore, $\partial p/\partial t = 0$. Since the fluid is inviscid and non-heat conducting, therefore $T_{ij}' = 0$ and $q_i = 0$. Thus, the energy equation (6.26.2) reduces to

$$\frac{Dh_o}{Dt} = 0 \tag{i}$$

In other words, h_o is a constant for each particle. But since the flow originates from a homogeneous state, therefore

$$h_o = h+\frac{v^2}{2} = \frac{p}{\rho}+u+\frac{v^2}{2} = \text{ constant} \tag{6.26.9}$$

in the whole flow field.

(b) For an ideal gas $p = \rho R\Theta$, $u = c_v\Theta$, and $R = c_p - c_v$, therefore

$$u = \frac{p}{\rho}\left(\frac{1}{\gamma-1}\right) \tag{6.26.10}$$

where

$$\gamma = \frac{c_p}{c_v} \tag{6.26.11}$$

and

$$h_o = \frac{p}{\rho}\left(\frac{\gamma}{\gamma-1}\right)+\frac{v^2}{2} = \text{ constant} \tag{6.26.12}$$

6.27 Acoustic Wave

The propagation of sound can be approximated by considering the propagation of infinitesimal disturbances in a compressible inviscid fluid. For an inviscid fluid, neglecting body forces, the equations of motion are

$$\frac{\partial v_i}{\partial t}+v_j\frac{\partial v_i}{\partial x_j} = -\frac{1}{\rho}\frac{\partial p}{\partial x_i} \tag{6.27.1}$$

Let us suppose that the fluid is initially at rest with

$$v_i = 0,\ \rho = \rho_o,\ p = p_o \tag{6.27.2}$$

Now suppose that the fluid is perturbed from rest such that

$$v_i = v'_i(\mathbf{x}, t),\ \rho = \rho_o + \rho'(\mathbf{x}, t),\ p = p_o + p'(\mathbf{x}, t) \tag{6.27.3}$$

Substituting Eq. (6.27.3) into Eq. (6.27.1),

$$\frac{\partial v_i'}{\partial t} + v_j' \frac{\partial v_i'}{\partial x_j} = -\frac{1}{\rho_o(1+\rho'/\rho_o)} \frac{\partial p'}{\partial x_i} \tag{i}$$

Since we assumed infinitesimal disturbances, the terms $v_j'(\partial v_i'/\partial x_j)$ and ρ'/ρ_o are negligible and the equations of motion now take the linearized form

$$\frac{\partial v_i'}{\partial t} = -\frac{1}{\rho_o} \frac{\partial p'}{\partial x_i} \tag{6.27.4}$$

In a similar manner, we consider the mass conservation equation

$$\frac{\partial \rho'}{\partial t} + v_i' \frac{\partial \rho'}{\partial x_i} + \rho_o(1+\rho'/\rho_o) \frac{\partial v_i'}{\partial x_i} = 0 \tag{ii}$$

and obtain the linearized equation

$$\frac{\partial v_i'}{\partial x_i} = -\frac{1}{\rho_o} \frac{\partial \rho'}{\partial t} \tag{6.27.5}$$

Differentiating Eq. (6.27.4) with respect to x_i and Eq. (6.27.5) with respect to t, we eliminate the velocity to obtain

$$\frac{\partial^2 p'}{\partial x_i \partial x_i} = \frac{\partial^2 \rho'}{\partial t^2} \tag{6.27.6}$$

We further assume that the flow is barotropic, i.e., the pressure depends explicitly on density only, so that the pressure $p = p(\rho)$. Expanding $p(\rho)$ in a Taylor series about the rest value of pressure p_o, we have

$$p = p_o + \left(\frac{dp}{d\rho}\right)_{\rho_o} (\rho - \rho_o) + \ldots \tag{6.27.7}$$

Neglecting higher-order terms

$$p' = c_o^2 \rho' \tag{6.27.8}$$

where

$$c_o^2 = \left(\frac{dp}{d\rho}\right)_{\rho_o} \tag{6.27.9}$$

Thus, for a barotropic fluid

$$c_o^2 \frac{\partial^2 p'}{\partial x_i \partial x_i} = \frac{\partial^2 p'}{\partial t^2} \tag{6.27.10}$$

and

$$c_o^2 \frac{\partial^2 \rho'}{\partial x_i \partial x_i} = \frac{\partial^2 \rho'}{\partial t^2} \tag{6.27.11}$$

These equations are exactly analogous (for one- dimensional waves) to the elastic wave equations of Chapter 5. Thus, we conclude that the pressure and density disturbances will propagate with a speed $c_o = \sqrt{(dp/d\rho)_{\rho_o}}$. We call c_o the **speed of sound** at stagnation, the local speed of sound is defined to be

$$c = \sqrt{\frac{dp}{d\rho}} \tag{6.27.12}$$

When the **isentropic** relation of p and ρ is used, i.e.,

$$p = \beta \rho^{\gamma} \tag{6.27.13}$$

where $\gamma = c_p/c_v$ (ratio of specific heats) and β is a constant

$$\frac{dp}{d\rho} = \beta\gamma\rho^{\gamma-1} = \gamma\frac{p}{\rho} \tag{iii}$$

so that the speed of sound is

$$c = \sqrt{\gamma p / \rho} \tag{6.27.14}$$

Example 6.27.1

(a) Write an expression for a harmonic plane acoustic wave propagating in the $\mathbf{e}_1$ direction.
(b) Find the velocity disturbance v_1.

(c) Compare $\partial v_i/\partial t$ to the neglected $v_j \partial v_i / \partial x_j$.

Solution. In the following, p, ρ, v_1 denote the disturbances, that is, we will drop the primes.
(a) Referring to the section on elastic waves, we have

$$p = \varepsilon \sin\left[\frac{2\pi}{l}(x_1 - c_o t)\right] \tag{i}$$

(b) Using Eq. (6.27.4), we have

$$\frac{\partial v_1}{\partial t} = -\frac{\varepsilon}{\rho_o}\left(\frac{2\pi}{l}\right)\cos\left[\frac{2\pi}{l}(x_1 - c_o t)\right] \tag{ii}$$

Therefore, the velocity disturbance

$$v_1 = \frac{\varepsilon}{\rho_o c_o} \sin\left[\frac{2\pi}{l(}x_1 - c_o t)\right] \tag{iii}$$

is exactly the same form as the pressure wave.

(c) For the one-dimensional case, we have the following ratio of amplitudes

$$\left| \frac{v_1 \dfrac{\partial v_1}{\partial x_1}}{\dfrac{\partial v_1}{\partial t}} \right| = \frac{|v_1|(2\pi\varepsilon/\rho_o l c_o)}{\dfrac{\varepsilon}{\rho_o}\left(\dfrac{2\pi}{l}\right)} = \frac{|v_1|}{c_o}$$

Thus, the approximation is best when the disturbance has a velocity that is much smaller than the speed of sound.

Example 6.27.2

Two fluids have a plane interface at $x_1 = 0$. Consider a plane acoustic wave that is normally incident on the interface and determine the amplitudes of the reflected and transmitted waves.

Solution. Let the fluid properties to the left of the interface ($x_1<0$) be denoted by ρ_1, c_1, and to the right ($x_1>0$) by ρ_2, c_2.

Now, let the incident pressure wave propagate to the right, as given by

$$p_I = \varepsilon_I \sin\frac{2\pi}{l_I}(x_1 - c_1 t) \qquad (x_1 \le 0) \tag{i}$$

This pressure wave results in a reflected wave

$$p_R = \varepsilon_R \sin\frac{2\pi}{l_R}(x_1 + c_1 t) \qquad (x_1 \le 0) \tag{ii}$$

and a transmitted wave

$$p_T = \varepsilon_T \sin\frac{2\pi}{l_T}(x_1 - c_2 t) \qquad (x_1 \ge 0) \tag{iii}$$

We must now consider the conditions on the boundary $x_1 = 0$. First, the total pressure must be the same, so that

$$(p_I + p_R)|_{x_1 = 0} = (p_T)|_{x_1 = 0} \tag{iv}$$

or,

$$\varepsilon_I \sin\frac{2\pi c_1 t}{l_I} - \varepsilon_R \sin\frac{2\pi c_1 t}{l_R} = \varepsilon_T \sin\frac{2\pi c_2 t}{l_T} \tag{v}$$

This equation will be satisfied for all time if

$$l_I = l_R = \frac{c_1}{c_2} l_T \tag{vi}$$

and

$$\varepsilon_I - \varepsilon_R = \varepsilon_T \tag{vii}$$

In addition, we require the normal velocity be continuous at all time on $x_1 = 0$, so that $\left(\frac{\partial v_1}{\partial t}\right)_{x_1 = 0}$, is also continuous. Thus, by using Eq. (6.27.4),

$$-\left(\frac{\partial v_1}{\partial t}\right)_{x_1 = 0} = \frac{1}{\rho_1}\left(\frac{\partial p_I}{\partial x_1} + \frac{\partial p_R}{\partial x_1}\right)_{x_1 = 0} = \frac{1}{\rho_2}\left(\frac{\partial p_T}{\partial x_1}\right)_{x_1 = 0} \tag{viii}$$

Substituting for the pressure, we obtain

$$\frac{1}{\rho_1}\left(\frac{\varepsilon_I}{l_I} + \frac{\varepsilon_R}{l_R}\right) = \frac{1}{\rho_2}\left(\frac{\varepsilon_T}{l_T}\right) \tag{ix}$$

Combining Eqs. (vi) (vii) and (ix) we obtain

$$\varepsilon_T = \left(\frac{2}{1 + (\rho_1 c_1 / \rho_2 c_2)}\right)\varepsilon_I \tag{x}$$

$$\varepsilon_R = \left(\frac{(\rho_1 c_1 / \rho_2 c_2) - 1}{1 + (\rho_1 c_1 / \rho_2 c_2)}\right)\varepsilon_I \tag{xi}$$

Note that for the special case $\rho_1 c_1 = \rho_2 c_2$,

$$\varepsilon_T = \varepsilon_I \text{ and } \varepsilon_R = 0 \tag{xii}$$

This product ρc is referred to as the "fluid impedance". This result shows that if the impedances match, there is no reflection.

6.28 Irrotational, Barotropic Flows of Inviscid Compressible Fluid

Consider an irrotational flow field given by

$$v_i = -\frac{\partial \varphi}{\partial x_i} \tag{6.28.1}$$

To satisfy the mass conservation principle, we must have

$$\frac{\partial \rho}{\partial t}+v_j\frac{\partial \rho}{\partial x_j}+\rho\frac{\partial v_j}{\partial x_j}=0 \tag{6.28.2}$$

In terms of φ this equation becomes

$$\frac{\partial \rho}{\partial t}-\frac{\partial \varphi}{\partial x_j}\frac{\partial \rho}{\partial x_j}-\rho\frac{\partial^2 \varphi}{\partial x_j \partial x_j}=0 \tag{6.28.3}$$

The equations of motion for an inviscid fluid are the Euler equations

$$\frac{\partial v_i}{\partial t}+v_j\frac{\partial v_i}{\partial x_j}=-\frac{1}{\rho}\frac{\partial p}{\partial x_i}+B_i \tag{6.28.4}$$

We assume that the flow is **barotropic**, that is, the pressure is an explicit function of density only (such as in isentropic or isothermal flow). Thus, in a barotropic flow,

$$p=p(\rho) \text{ and } \rho=\rho(p) \tag{6.28.5}$$

Now,

$$\frac{\partial}{\partial x_i}\left(\int\frac{1}{\rho}dp\right)=\left[\frac{d}{dp}\int\frac{1}{\rho}dp\right]\frac{\partial p}{\partial x_i}=\frac{1}{\rho}\frac{\partial p}{\partial x_i} \tag{6.28.6}$$

Therefore, for barotropic flows of an inviscid fluid under conservative body forces (i.e., $B_i=-\frac{\partial \Omega}{\partial x_i}$), the equations of motion can be written

$$\frac{\partial v_i}{\partial t}+v_j\frac{\partial v_i}{\partial x_j}=-\frac{\partial}{\partial x_i}\left(\int\frac{dp}{\rho}+\Omega\right) \tag{6.28.7}$$

Comparing Eq. (6.28.7) with (6.21.6), we see immediately that under the conditions stated, irrotational flows are again always dynamically possible. In fact, the integration of Eq. (6.28.7) (in exactly the same way as was done in Section 6.21) gives the following Bernoulli equation

$$-\frac{\partial \varphi}{\partial t}+\int\frac{dp}{\rho}+\frac{v^2}{2}+\Omega=f(t) \tag{6.28.8}$$

which for steady flow, becomes

$$\int\frac{dp}{\rho}+\frac{v^2}{2}+\Omega=\text{constant} \tag{6.28.10}$$

For most problems in gas dynamics, the body force is small compared with other forces and often neglected. We then have

$$\int\frac{dp}{\rho}+\frac{v^2}{2}=\text{constant} \tag{6.28.11}$$

Example 6.28.1

Show that for steady isentropic irrotational flows of an inviscid compressible fluid (body force neglected)

$$\frac{\gamma}{\gamma-1}\frac{p}{\rho}+\frac{v^2}{2} = \text{constant} \tag{i}$$

Solution. For an isentropic flow

$$p = \beta\rho^{\gamma},\ dp = \beta\gamma\rho^{\gamma-1}d\rho$$

so that

$$\int\frac{dp}{\rho} = \beta\gamma\int\rho^{\gamma-2}d\rho = \beta\gamma\left(\frac{\rho^{\gamma-1}}{\gamma-1}\right) = \frac{\gamma}{\gamma-1}\frac{p}{\rho} \tag{ii}$$

Thus, the Bernoulli equation [Eq. (6.28.11)] becomes

$$\frac{\gamma}{\gamma-1}\frac{p}{\rho}+\frac{v^2}{2} = \text{constant} \tag{iii}$$

We note that this is the same result as that obtained in Example 26.1, Eq. (6.26.8), by the use of the energy equation. In other words, under the conditions stated (inviscid, non-heat conducting, initial homogeneous state), the Bernoulli equation and the energy equation are the same.

Example 6.28. 2

Let p_o denote the pressure at zero speed (called **stagnation pressure** .) Show that for isentropic steady flow (p/ρ^{γ} = constant) of an ideal gas,

$$p_o = p\left[1+\frac{1}{2}(\gamma-1)\left(\frac{v}{c}\right)^2\right]^{\gamma/(\gamma-1)} \tag{6.28.12}$$

where c is the local speed of sound.

Solution. Since (see the previous example)

$$\frac{\gamma}{\gamma-1}\frac{p}{\rho}+\frac{v^2}{2} = \text{constant} \tag{i}$$

therefore,

$$\frac{v^2}{2} = \frac{\gamma}{\gamma-1}\left(\frac{p_o}{\rho_o}-\frac{p}{\rho}\right) \tag{ii}$$

Now, $c^2 = \gamma p/\rho$

$$\frac{v^2}{2c^2} = \frac{1}{\gamma-1}\left(\frac{p_o}{p}\right)\left(\frac{\rho}{\rho_o}\right) - \frac{1}{\gamma-1} \tag{iii}$$

Since

$$\frac{\rho}{\rho_o} = \left(\frac{p}{p_o}\right)^{1/\gamma} = \left(\frac{p_o}{p}\right)^{-1/\gamma} \tag{iv}$$

therefore, from (iii)

$$\left(\frac{\gamma-1}{2}\right)\left(\frac{v}{c}\right)^2 = \left(\frac{p_o}{p}\right)^{(\gamma-1)/\gamma} - 1 \tag{v}$$

Thus,

$$\frac{p_o}{p} = \left[1+\left(\frac{\gamma-1}{2}\right)\left(\frac{v}{c}\right)^2\right]^{\gamma/(\gamma-1)} \tag{vi}$$

For small Mach number M, (i.e., $v/c << 1$), we can use the binomial expansion to obtain from the above equation

$$\frac{p_o}{p} = 1+\frac{\gamma}{2}\left(\frac{v}{c}\right)^2 + \frac{1}{8}\gamma\left(\frac{v}{c}\right)^4 + \ldots. \tag{vii}$$

Noting that

$$\frac{p\gamma}{c^2} = \frac{p\gamma}{\gamma\left(\frac{p}{\rho}\right)} = \rho$$

we have, from (vi)

$$p_o = p + \frac{1}{2}\rho v^2\left[1+\frac{1}{4}\left(\frac{v}{c}\right)^2 + \ldots\right] \tag{viii}$$

For small Mach number M, the above equation is approximately

$$p_o = p + \frac{1}{2}\rho v^2 \tag{ix}$$

which is the same as that for an incompressible fluid. In other words, for steady isentropic flow, the fluid may be considered as incompressible if the Mach number is small (say < 0.3.)

Example 6.28.3

For steady, barotropic irrotational flow, derive the equation for the velocity potential φ. Neglect body forces.

Solution. For steady flow, the equation of continuity is, with $v_i = -\partial\varphi/\partial x_i$,

$$\frac{\partial\varphi}{\partial x_i}\frac{\partial\rho}{\partial x_i}+\rho\frac{\partial^2\varphi}{\partial x_i\partial x_i} = 0 \tag{i}$$

and the equation of motion is

$$\frac{\partial\varphi}{\partial x_j}\frac{\partial^2\varphi}{\partial x_j\partial x_i} = -\frac{1}{\rho}\frac{\partial p}{\partial x_i} = -\frac{1}{\rho}\frac{dp}{d\rho}\frac{\partial\rho}{\partial x_i} \tag{ii}$$

Let $c^2 \equiv dp/d\rho$ (the local sound speed), then

$$-\frac{1}{\rho}\frac{\partial\rho}{\partial x_i} = \frac{1}{c^2}\left(\frac{\partial\varphi}{\partial x_j}\frac{\partial^2\varphi}{\partial x_j\partial x_i}\right) \tag{iii}$$

Substituting Eq. (iii) into Eq. (i), we obtain

$$-\frac{\partial\varphi}{\partial x_i}\frac{\partial\varphi}{\partial x_j}\frac{\partial^2\varphi}{\partial x_j\partial x_i}+c^2\frac{\partial^2\varphi}{\partial x_i\partial x_i} = 0 \tag{iv}$$

or,

$$\left(c^2\delta_{ij}-\frac{\partial\varphi}{\partial x_i}\frac{\partial\varphi}{\partial x_j}\right)\frac{\partial^2\varphi}{\partial x_i\partial x_j} = 0. \tag{v}$$

In long form, Eq. (v) reads

$$\left[c^2-\left(\frac{\partial\varphi}{\partial x_1}\right)^2\right]\frac{\partial^2\varphi}{\partial x_1^2}+\left[c^2-\left(\frac{\partial\varphi}{\partial x_2}\right)^2\right]\frac{\partial^2\varphi}{\partial x_2^2}+\left[c^2-\left(\frac{\partial\varphi}{\partial x_3}\right)^2\right]\frac{\partial^2\varphi}{\partial x_3^2}$$

$$-2\left(\frac{\partial\varphi}{\partial x_1}\frac{\partial\varphi}{\partial x_2}\frac{\partial^2\varphi}{\partial x_1\partial x_2}+\frac{\partial\varphi}{\partial x_2}\frac{\partial\varphi}{\partial x_3}\frac{\partial^2\varphi}{\partial x_2\partial x_3}+\frac{\partial\varphi}{\partial x_3}\frac{\partial\varphi}{\partial x_1}\frac{\partial^2\varphi}{\partial x_3\partial x_1}\right) = 0 \tag{vi}$$

6.29 One-Dimensional Flow of a Compressible Fluid

In this section, we discuss some internal flow problems of a compressible fluid. The fluid will be assumed to be an ideal gas. The flow will be assumed to be one-dimensional in the sense that the pressure, temperature, density, velocity, etc. are uniform over any cross-section of the channel or duct in which the fluid is flowing. The flow will also be assumed to be steady and adiabatic.

In steady flow, the rate of mass flow is constant for all cross-sections. With A denoting the variable cross-sectional area, ρ the density and v the velocity, we have

$$\rho A v = C \text{ (a constant)} \tag{6.29.1}$$

To see the effect of area variation on the flow, we take the total derivative of Eq. (6.29.1), i.e.,

$$d\rho(Av)+\rho(dA)v+\rho A(dv) = 0$$

Dividing the above equation by $\rho A v$, we obtain

$$\frac{d\rho}{\rho}+\frac{dA}{A}+\frac{dv}{v} = 0 \tag{6.29.2}$$

Thus,

$$\frac{dA}{A} = -\frac{d\rho}{\rho}-\frac{dv}{v} \tag{i}$$

Now, for barotropic flow of an ideal gas , we have [see Eq. (6.28.11)]

$$\frac{v^2}{2}+\int\frac{dp}{\rho} = \text{constant} \tag{6.29.3}$$

Thus,

$$vdv+\frac{dp}{\rho} = vdv+\frac{1}{\rho}\frac{dp}{d\rho}d\rho = 0 \tag{ii}$$

But $\sqrt{(dp/d\rho)} = c$ (the speed of sound), thus,

$$\frac{d\rho}{\rho} = -\frac{vdv}{c^2} \tag{iii}$$

Combining Eqs. (i) and (iii), we get

$$\frac{dA}{A} = \frac{vdv}{c^2}-\frac{dv}{v} = \frac{dv}{v}\left(\frac{v^2}{c^2}-1\right) \tag{iv}$$

i.e.,

$$\frac{dA}{A} = \frac{dv}{v}(M^2-1) \tag{6.29.4}$$

Eq. (6.29.4) is sometimes known as **Hugoniot equation**. From this equation, we see that for subsonic flows ($M < 1$), an increase in area produces a decrease in velocity, just as in the case of an incompressible fluid. On the other hand, for supersonic flows ($M > 1$), an increase in area produces an increase in velocity. Furthermore, the critical velocity ($M=1$) can only be obtained at the smallest cross-sectional area where $dA = 0$.

We now study the flow in a converging nozzle and the flow in a converging-diverging nozzle, using one-dimensional assumptions.

(i) *Flow in a Converging Nozzle*

Let us consider the adiabatic flow of an ideal gas from a large tank (inside which the pressure p_1, and the density ρ_1 remain essentially unchanged) into a region of pressure p_R.

Application of the energy equation, using the conditions inside the tank and at the section (2) gives

$$\frac{v_2^2}{2}+\frac{\gamma}{\gamma-1}\frac{p_2}{\rho_2}=0+\frac{\gamma}{\gamma-1}\frac{p_1}{\rho_1} \tag{i}$$

where p_2, ρ_2, and v_2 are pressure, density, and velocity at section (2). Thus

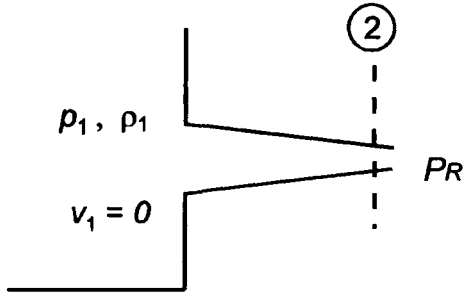

Fig. 6.15

$$v_2^2=\frac{2\gamma}{\gamma-1}\left(\frac{p_1}{\rho_1}-\frac{p_2}{\rho_2}\right) \tag{ii}$$

For adiabatic flow,

$$\left(\frac{p_2}{p_1}\right)^{\frac{1}{\gamma}}=\left(\frac{\rho_2}{\rho_1}\right) \tag{iii}$$

Therefore,

$$v_2^2 = \frac{2\gamma}{\gamma-1}\frac{p_1}{\rho_1}\left[1-\left(\frac{p_2}{p_1}\right)^{\frac{(\gamma-1)}{\gamma}}\right] = \frac{2\gamma}{\gamma-1}\frac{p_2}{\rho_2}\left[\left(\frac{p_1}{p_2}\right)^{\frac{(\gamma-1)}{\gamma}}-1\right] \tag{6.29.5}$$

Computing the rate of mass flow dm/dt, we have

$$\frac{dm}{dt} = A_2\rho_2 v_2 = A_2\left(\frac{p_2}{p_1}\right)^{1/\gamma}\rho_1 v_2 \tag{iv}$$

Thus,

$$\frac{dm}{dt} = A_2\left(\frac{p_2}{p_1}\right)^{1/\gamma}\rho_1\left(\frac{2\gamma}{\gamma-1}\frac{p_1}{\rho_1}\left[1-\left(\frac{p_2}{p_1}\right)^{(\gamma-1)/\gamma}\right]\right)^{1/2} \tag{v}$$

or

$$\frac{dm}{dt} = A_2\left[\frac{2\gamma}{\gamma-1}(p_1\rho_1)\left(\left(\frac{p_2}{p_1}\right)^{2/\gamma}-\left(\frac{p_2}{p_1}\right)^{(1+\gamma)/\gamma}\right)\right]^{1/2} \tag{6.29.6}$$

For given p_1, ρ_1, and A_2 we see dm/dt depends only on p_2. When $p_2 = 0$, dm/dt is zero and when $p_2 = p_1$, dm/dt is also zero.

Figure 6.16 shows the curve of dm/dt versus p_2/p_1, according to Eq. (6.29.6). It can be easily established that $(dm/dt)_{\max}$ occurs at

$$p = \left(\frac{2}{\gamma+1}\right)^{\gamma/(\gamma-1)} p_1 \tag{6.29.7}$$

and at this pressure p_2,

$$v_2^2 = \frac{2\gamma}{\gamma-1}\frac{p_2}{\rho_2}\left(\frac{\gamma+1}{2}-1\right) = \gamma\frac{p_2}{\rho_2} = \text{speed of sound at section(2)} \tag{6.29.8}$$

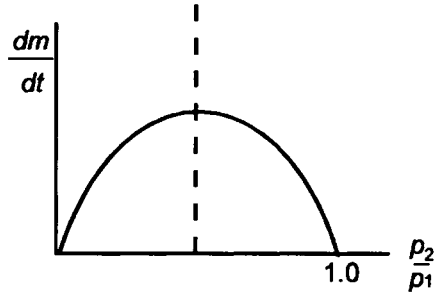

Fig. 6.16

The pressure p_2 given by Eq. (6.29.8) is known as the critical pressure p_c. The pressure p_2 at section (2) can never be less than p_c (which depends only on p_1) because otherwise the flow will become supersonic at section (2) which is impossible in view of the conclusion reached earlier that to have $M = 1$, dA must be zero, and to have $M>1$, dA must be increasing(divergent nozzle). Thus, for the case of a convergent nozzle, p_2 can never be less that p_R, the pressure surrounding the exit jet. When $p_R \geq p_c$, $p_2 = p_R$, and when $p_R < p_c$, $p_2 = p_c$. In other words, the relation between dm/dt and p_R/p_1 is given as, for $p_R \geq p_c$

$$\frac{dm}{dt} = A_2\left[\frac{2\gamma}{\gamma-1}(p_1\rho_1)\right]^{1/2}\left[\left(\frac{p_R}{p_1}\right)^{2/\gamma} - \left(\frac{p_R}{p_1}\right)^{(\gamma+1)/\gamma}\right]^{1/2} \tag{6.29.9}$$

and for $p_R \leq p_c$

$$\frac{dm}{dt} = A_2\left[\frac{2\gamma}{\gamma-1}p_1\rho_1\right]^{1/2}\left[\left(\frac{2}{\gamma+1}\right)^{2/(\gamma-1)} - \left(\frac{2}{\gamma+1}\right)^{(\gamma+1)/(\gamma-1)}\right]^{1/2} = \text{constant} \tag{6.29.10}$$

Figure 6.17 shows this relationship.

(ii) *Flow in a Convergent-Diverging Nozzle*

For a compressible fluid from a large supply tank, in order to increase the speed, a converging nozzle is needed. From (i), we have seen that the maximum attainable Mach number is unity in a converging passage. We have also concluded at the beginning of this section that in order to have the Mach number larger than unity, the cross-sectional area must increase in the direction of flow. Thus, in order to make supersonic flow possible from a supply

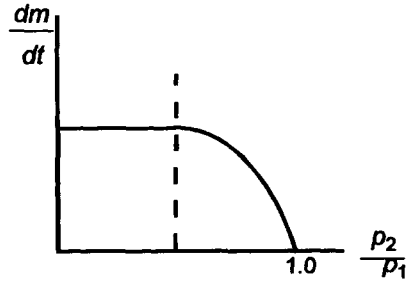

Fig. 6.17

tank, the fluid must flow in a converging- diverging nozzle as shown in Fig. 6.18. The flow in the converging part of the nozzle is always subsonic regardless of the receiver pressure $p_R(<p_1)$. The flow in the diverging passage is subsonic for certain range of p_R/p_1 (see curves *a* and *b* in Fig. 6.18). There is a value of p_R at which the flow at the throat is sonic, the flow corresponding to this case is known as **choked flow** (curve *c*). Further reductions of p_R cannot affect the condition at the throat and produces no change in flow rate. There is one receiver pressure p_R for which the flow can expand isentropically to p_R (the solid curve *e*.)

If the receiver pressure p_R is between *c* and *e*, such as *d*, the flow following the throat for a short distance will be supersonic. This is then followed by a discontinuity† in pressure (compression shock) and flow becomes subsonic for the remaining distance to the exit. If the receiver pressure is below that indicated by *e* in the figure, a series of expansion waves and oblique shock waves occur outside the nozzle.

† That is, the increase in pressure takes place in a very short distance

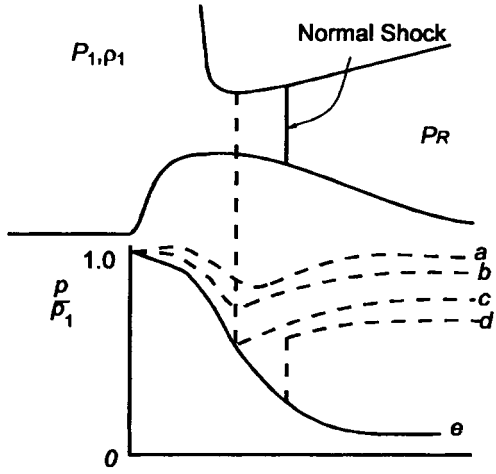

Fig. 6.18

PROBLEMS

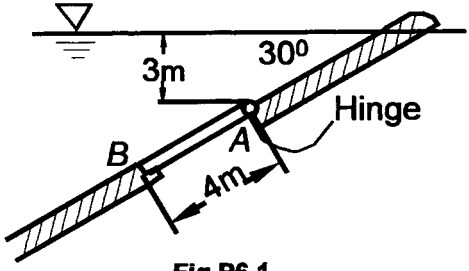

Fig.P6.1

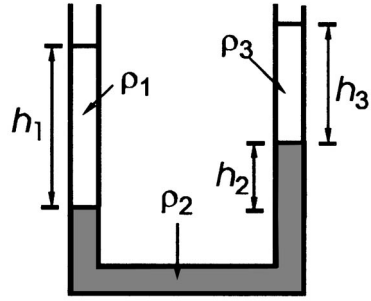

Fig.P6.3

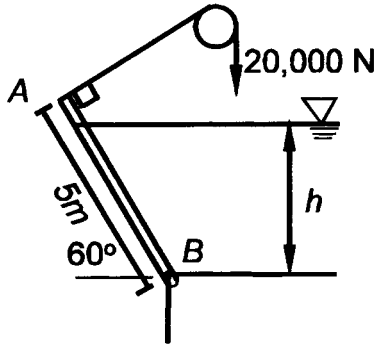

Fig.P6.2

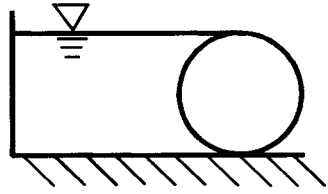

Fig.P6.4

6.1. In Fig.P6.1, the gate AB is rectangular, 60 cm wide and 4 m long. The gate is hinged at the upper edge A. Neglect the weight of the gate, find the reactional force at B. Take the specific weight of water to be 9800 N/ m^3 (62.4 lb/ft^3)

6.2. The gate AB in Fig.P6.2 is 5 m long and 3 m wide. Neglect the weight of the gate, compute the water level h for which the gate will start to fall.

6.3. The liquids in the U-tube shown in Fig.P6.3 is in equilibrium. Find h_2 as a function of $\rho_1, \rho_2, \rho_3, h_1$ and h_3. The liquids are immiscible.

6.4. Referring to Fig.P6.4, (a) Find the buoyancy force on the cylinder and (b) find the resultant force on the cylindrical surface due to the water pressure. The centroid of a semi-circular area is $4r/3\pi$ from the diameter, where r is the radius.

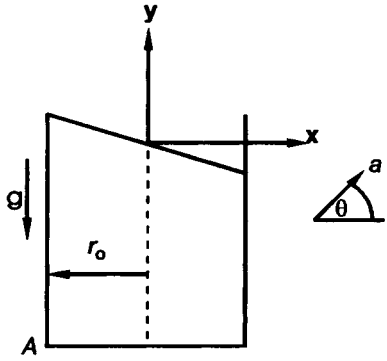

Fig.P6.5

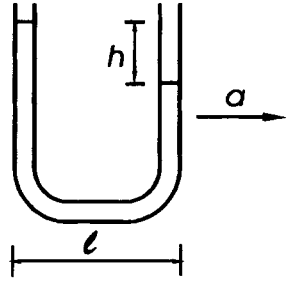

Fig.P6.6

6.5. A glass of water moves vertically upward with a constant acceleration a. Find the pressure at a point whose depth from the surface of the water is h.

6.6. A glass of water moves with a constant acceleration **a** in the direction shown in Fig.P6.5. Find the pressure at the point A. Take the atmospheric pressure to be p_a.

6.7. The slender U-tube shown in Fig.P6.6 is moving horizontally to the right with an acceleration a. Determine the relation between a, l and h.

6.8. A liquid in a container rotates with a constant angular velocity ω about a vertical axis. Find the shape of the liquid surface.

6.9. The slender U-tube rotates with an angular velocity ω about the vertical axis shown in Fig.P6.7. Find the relation between $\delta h(\equiv h_1 - h_2),\omega, r_1$ and r_2.

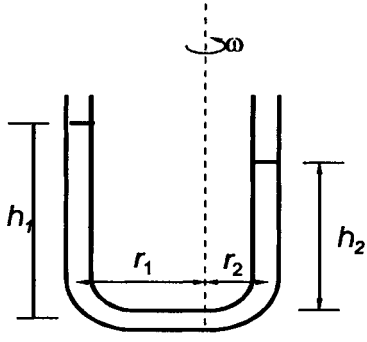

Fig.P6.7

6.10. In astrophysical applications, an atmosphere having the relation between the density ρ and pressure p given by

$$\frac{p}{p_o} = \left(\frac{\rho}{\rho_o}\right)^n$$

where p_o and ρ_o are some reference pressure and density, is known as a polytropic atmosphere. Find the distribution of pressure and density in a polytropic atmosphere.

6.11. For a steady parallel flow of an incompressible linearly viscous fluid, if we take the flow direction to be $\mathbf{e}_3$,

(a) show that the velocity field is of the form

$$v_1 = 0, \quad v_2 = 0, \quad \text{and } v_3 = v(x_1, x_2)$$

(b) If $v(x_1, x_2) = kx_2$, find the total normal stress on the plane whose normal is in the direction of $\mathbf{e}_2 + \mathbf{e}_3$, in terms of the viscosity μ and pressure p

(c) On what planes are the total normal stresses given by the so-called "pressure"?

6.12. Given the following velocity field (in m/s) for a Newtonian incompressible fluid with a viscosity $\mu = 0.96$ mPa:

$$v_1 = x_1^2 - x_2^2, \quad v_2 = -2x_1x_2, \quad v_3 = 0.$$

At the point (1,2,1)m and on the plane whose normal is in the direction of $\mathbf{e}_1$,

(a) find the excess of the total normal compressive stress over the pressure p,

(b) find the magnitude of the shearing stress.

6.13. Do Problem 6.12 except that the plane has a normal in the direction of $3\mathbf{e}_1 + 4\mathbf{e}_2$.

6.14. Use the results of Sect. 2D2, Chapter 2 and the constitutive equations for the Newtonian viscous fluid, verify Eqs. (6.8.1).

6.15. Use the results of Sect.2D3,Chapter 2 and the constitutive equations for the Newtonian viscous fluid, verify Eqs. (6.8.3).

6.16. Show that for a steady flow, the streamline containing a point P coincides with the pathline for a particle which passes through the point P at some time t.

6.17. For the two dimensional velocity field

$$v_1 = \frac{kx_1x_2}{1 + kx_2t}, \quad v_2 = 0$$

(a) Find the streamline at time t, which passes through the spatial point (α_1,α_2)

(a) find the pathline for the particle which was at (X_1, X_2) at $t = 0$.

(c) Find the streakline at time t, formed by the particles which passed through the spatial position (α_1, α_2) at time $\tau \leq t$.

6.18. Do Prob. 6.17 for the following two dimensional velocity field

$$v_1 = \omega x_2, \quad v_2 = -\omega x_1$$

6.19. Do Prob. 6.17 for the following velocity field in polar coordinates (r, θ)

$$v_r = \frac{Q}{2\pi r}, \quad v_\theta = 0$$

6.20. Do Prob. 6.17 for the following velocity field in polar coordinates (r, θ)

$$v_r = 0, \quad v_\theta = \frac{C}{r}$$

6.21. From the Navier-Stokes equations, obtain Eq. (6.11.1) for the velocity distribution of the plane Couette flow.

6.22. For the plane Couette flow (see Section 6.11), if, in addition to the movement of the upper plate, there is also an applied negative pressure gradient $\frac{\partial p}{\partial x_1}$, obtain the velocity distribution. Also obtain the volume flow rate per unit width.

6.23. Obtain the steady uni-directional flow of an incompressible viscous fluid layer of uniform depth d flowing down an inclined plane which makes an angle θ with the horizontal.

6.24. A layer of water ($\rho g = 62.4$ lb/ft^3) flows down an inclined plane ($\theta = 30^o$) with a uniform thickness of 0.1 ft. Assuming the flow to be laminar, what is the pressure at any point on the inclined plane. Take the atmospheric pressure to be zero.

6.25. Two layers of liquids with viscosities μ_1 and μ_2, density ρ_1 and ρ_2, respectively, and with equal depths b, flow steadily between two fixed horizontal parallel plates. Find the velocity distribution for this steady uni-directional flow.

6.26. For the Hagen-Poiseuille flow in an inclined pipe, from the equations of motion show that if x_1 is the direction of flow, then (a) the piezometric head depends only on x_1 ,i.e., $h = h(x_1)$ and (b) $(dh/x_1) =$ a constant.

6.27. Verify the equation for the torque per unit length for the Couette flow, Eq. (6.15.5).

6.28. Consider the flow of an incompressible viscous fluid through the annular space between two concentric horizontal cylinders. The radii are a and b. (a) Find the flow field if there is no variation of pressure in the axial direction and if the inner and the outer cylinders have axial velocities v_a and v_b respectively and (b) find the flow field if there is a pressure gradient in the axial direction and both cylinders are fixed.

6.29. Show that for the velocity field

$$v_1 = v(y,z), \quad v_2 = v_3 = 0$$

the Navier-Stokes equations, with $\rho\mathbf{B} = \mathbf{0}$, reduces to

$$\frac{\partial^2 v}{\partial y^2} + \frac{\partial^2 v}{\partial z^2} = \frac{1}{\mu}\frac{dp}{dx} = \beta = \text{ constant.}$$

6.30. Referring to Problem 6.29, consider a pipe having an elliptic cross section given by $y^2/a^2 + z^2/b^2 = 1$. Assuming that

$$v = A\left[\frac{y^2}{a^2} + \frac{z^2}{b^2}\right] + B,$$

find A and B.

6.31. Referring to Problem 6.29, consider an equilateral triangular cross-section defined by the planes $z + b/(2\sqrt{3}) = 0$, $z + \sqrt{3}\,y - b/\sqrt{3} = 0$, $z - \sqrt{3}y - b/\sqrt{3} = 0$. Assuming

$$v = A\left(z + \frac{b}{2\sqrt{3}}\right)\left(z + \sqrt{3}\,y - \frac{b}{\sqrt{3}}\right)\left(z - \sqrt{3}\,y - \frac{b}{\sqrt{3}}\right) + B,$$

find A and B.

6.32. For the steady-state, time dependent parallel flow of water (density $\rho = 10^3$ Kg/ m^3, viscosity $\mu = 10^{-3}$ Ns/m^2) near an oscillating plate, calculate the wave length for $\omega = 2$cps.

6.33. The space between two concentric spherical shell is filled with an incompressible Newtonian fluid. The inner shell (radius r_i) is fixed; the outer shell (radius r_o) rotates with an angular velocity Ω about a diameter. Find the velocity distribution. Assume the flow to be laminar without secondary flow.

6.34. Consider the following velocity field in cylindrical coordinates:

$$v_r = v(r), \quad v_\theta = v_z = 0.$$

(a) Show that $v(r) = \dfrac{A}{\rho r}$, where A is a constant so that the equation of conservation of mass is satisfied.

(b) If the rate of mass flow through a circular cylindrical surface of radius r and unit length is Q_m, determine the constant A in terms of Q_m.

6.35. Given the following velocity field in cylindrical coordinates

$$v_r = v(r, \theta), \quad v_\theta = 0, \quad v_z = 0$$

(a) Show from the continuity equation that

$$v_r = \frac{f(\theta)}{r}$$

(b) In the absence of body forces, show that

$$\frac{d^2 f}{d\theta^2} + 4f + \frac{\rho f^2}{\mu} + k = 0 \quad \text{and}$$

$$p = 2\mu\frac{f}{r^2} + \frac{k\mu}{2r^2} + C$$

where k and C are constants.

6.36. Determine the temperature distribution for the flow of Prob. 6.22 due to viscous dissipation when both plates are maintained at the same fixed temperature θ_o. Assume constant physical properties.

6.37. Determine the temperature distribution in the plane Poiseuille flow where the bottom plate is kept at a constant temperature θ_1 and the top plate at θ_2. Include the heat generated by viscous dissipation.

6.38. Determine the temperature distribution in the laminar flow between two coaxial cylinders (Couette flow) if the temperatures at the inner and the outer cylinders are kept at the same fixed temperature θ_o.

6.39. Show that the dissipation function for a compressible fluid can be written as that given in Eq. (6.17.6b).

6.40. Given the velocity field of a linearly viscous fluid

$$v_1 = kx_1,\ v_2 = -kx_2,\ v_3 = 0$$

(a) Show that the velocity field is irrotational.

(b) Find the stress tensor.

(c) Find the acceleration field.

(d) Show that the velocity field satisfies the Navier-Stokes equations by finding the pressure distribution directly from the equations. Neglect body forces. Take $p = p_o$ at the origin.

(e) Use the Bernoulli equation to find the pressure distribution.

(f) Find the rate of dissipation of mechanical energy into heat.

(g) If $x_2 = 0$ is a fixed boundary, what condition is not satisfied by the velocity field?

6.41. Do Problem 6.40 for the following velocity field:

$$v_1 = k(x_1^2 - x_2^2),\ v_2 = -2kx_1x_2,\ v_3 = 0$$

6.42. Obtain the vorticity components for the plane Poiseuille flow.

6.43. Obtain the vorticity components for the Hagen-Poiseuille flow.

6.44. For two-dimensional flow of an incompressible fluid, we can express the velocity components in terms of a scalar function ψ (known as the Lagrange stream function) by the relation

$$v_1 = \frac{\partial \psi}{\partial y},\quad v_2 = -\frac{\partial \psi}{\partial x}$$

(a) Show that the equation of conservation of mass is automatically satisfied for any $\psi(x,y)$ which has continuous second partial derivatives.

(b) Show that for two-dimensional flow of an incompressible fluid, ψ = constants are streamlines, where ψ is the Lagrange stream function.

(c) If the velocity field is irrotational, then $v_i = -\partial\varphi / \partial x_i$, where φ is known as the velocity potential. Show that the curves of constant velocity potential $\varphi =$ constant and the stream line $\psi =$ constant are orthogonal to each other.

(d) Obtain the only nonzero vorticity component in terms of ψ.

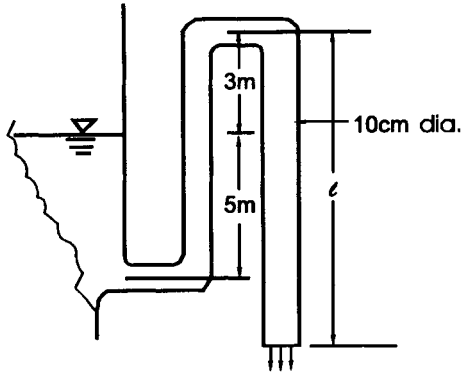

Fig.P6.8

6.45. Show that

$$\psi = V_o y \left(1 - \frac{a^2}{x^2 + y^2}\right)$$

represents a two-dimensional irrotational flow of an inviscid fluid. Sketch the stream lines in the region $x^2 + y^2 \geq a^2$

6.46. Referring to Fig.P6.8, compute the maximum possible flow of water. Take the atmospheric pressure to be 93.1 kPa, the specific weight of water 9800 N/m^3, and the vapor pressure 17.2 kPa. Assume the fluid to be inviscid. Find the length l for this rate of discharge.

6.47. Water flows upward through a vertical pipeline which tapers from 25.4 cm to 15.2 cm diameter in a distance of 1.83 m. If the pressure at the beginning and end of the constriction are 207 kPa and 172 kPa respectively. What is the flow rate? Assume the fluid to be inviscid.

6.48. Verify that the equation of conservation of mass is automatically satisfied if the velocity components in cylindrical coordinates are given by

$$v_r = -\frac{1}{\rho r}\frac{\partial\psi}{\partial z}, \quad v_z = -\frac{1}{\rho r}\frac{\partial\psi}{\partial r}, \quad v_\theta = 0$$

where the density ρ is a constant and ψ is any function of r and z having continuous second partial derivatives.

6.49. Derive Eq. (6.25.6).

6.50. Show that for a one-dimensional, steady, adiabatic flow of an ideal gas, the ratio of temperature θ_1/θ_2 at sections (1) and (2) is given by

$$\frac{\theta_1}{\theta_2} = \frac{1 + \frac{1}{2}(\gamma - 1)M_1^2}{1 + \frac{1}{2}(\gamma - 1)M_2^2}$$

where γ is the ratio of specific heat, M_1 and M_2 are local Mach numbers at section 1 and 2 respectively.

6.51. Show that for a compressible fluid in isothermal flow with no external work,

$$\frac{dM^2}{M^2} = 2\frac{dv}{v}$$

where M is the Mach number. (Assume perfect gas.)

6.52. Show that for a perfect gas flowing through a constant area duct at constant temperature conditions.

$$\frac{dp}{p} = -\frac{1}{2}\frac{dM^2}{M^2}.$$

6.53. For the flow of a compressible inviscid fluid around a thin body in a uniform stream of speed V_m in the x_1 - direction, we let the velocity potential be

$$\varphi = -V_o(x_1 + \varphi_1),$$

where φ_1 is assumed to be very small. Show that for steady flow the equation governing $\varphi_1$is, with $M_o = V_o/c_o$

$$(1 - M_o^2)\frac{\partial^2\varphi_1}{\partial x_1^2} + \frac{\partial^2\varphi_1}{\partial x_2^2} + \frac{\partial^2\varphi_1}{\partial x_3^2} = 0.$$